Creating Fluid Solutions

A MEMBER OF NIKKISO

LEWA pumps + systems

LEWA ecoflow®

Diaphragm metering pumps
and process diaphragm pumps





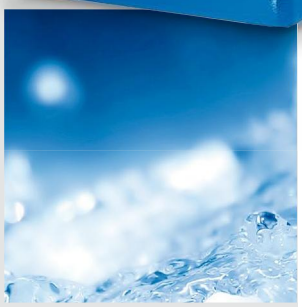



- **accurate**
- **safe**
- **economical**
- **innovative**

For a wide range of applications: LEWA ecoflow in a proven modular system



The chemical industry:
LEWA ecoflow pumps are used, for example, for extraction in high-pressure processes.

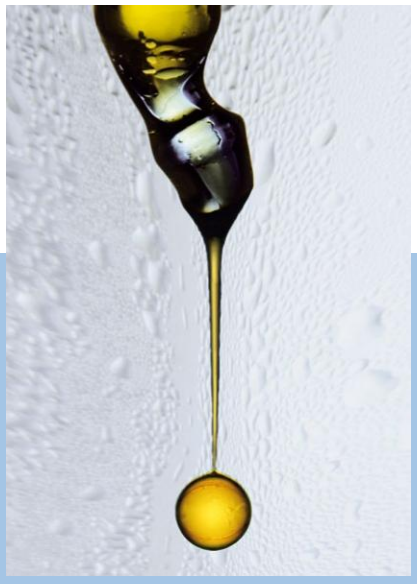

The petrochemical industry:
Used for gentle metering of highly viscous fluids in the production of biofuels, for example.

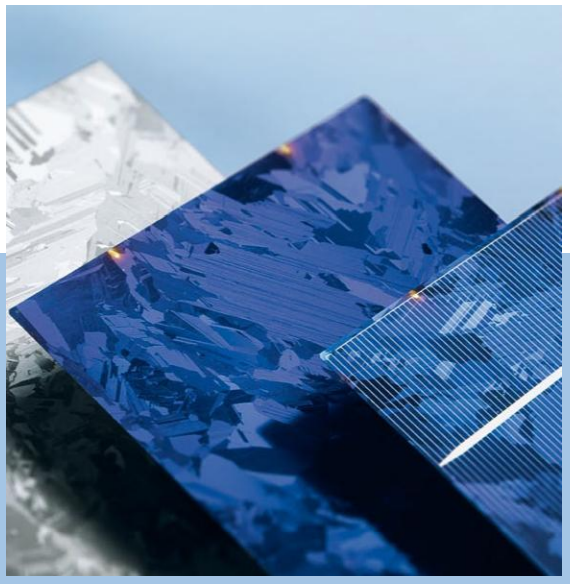

The plastics industry:
LEWA ecoflow pumps are used, for example, for polymerization processes in the manufacture of solar cells.

The proven modular system combined with innovative pump head technology
The LEWA ecoflow metering pump series is based on a proven modular system. Combined with the newly developed diaphragm pump heads of the M900 series, this range meets the high expectations of our customers.

For even better economy
An optimum customer-specific design can be configured from a wide range of standardized assemblies for your individual application: be it in the chemical, petrochemical, pharmaceutical, cosmetics or food industry.

The modular structure of the range means that it is possible to offer LEWA quality at a price geared to the market.

With even more reliability and quality
LEWA ecoflow provides the most advanced diaphragm metering pumps in the world with maximum security for both production and the environment, primarily through the unique DPS (diaphragm protection system). A crucial advance for your process reliability!

Benefits offered:
- Accurate metering
- Hermetically sealed, leak-free
- High operating safety
- Economical modular system
- Long maintenance intervals
- Lowest life-cycle costs
- Supplied to meet standard regulations (VDMA 24284, 24286-10, API 675, 3A, FDA)
- Global service



The pharmaceutical industry:
LEWA ecoflow in hygienic design meets the high demands of the pharmaceutical industry for extruding tablets, for example.



The cosmetics industry:
LEWA ecoflow in sanitary design ensures problem-free cleaning in the manufacture of skin care products, for example.



The food industry:
Sterile and reliable production, for manufacturing gelatin or fruit gums, for example.

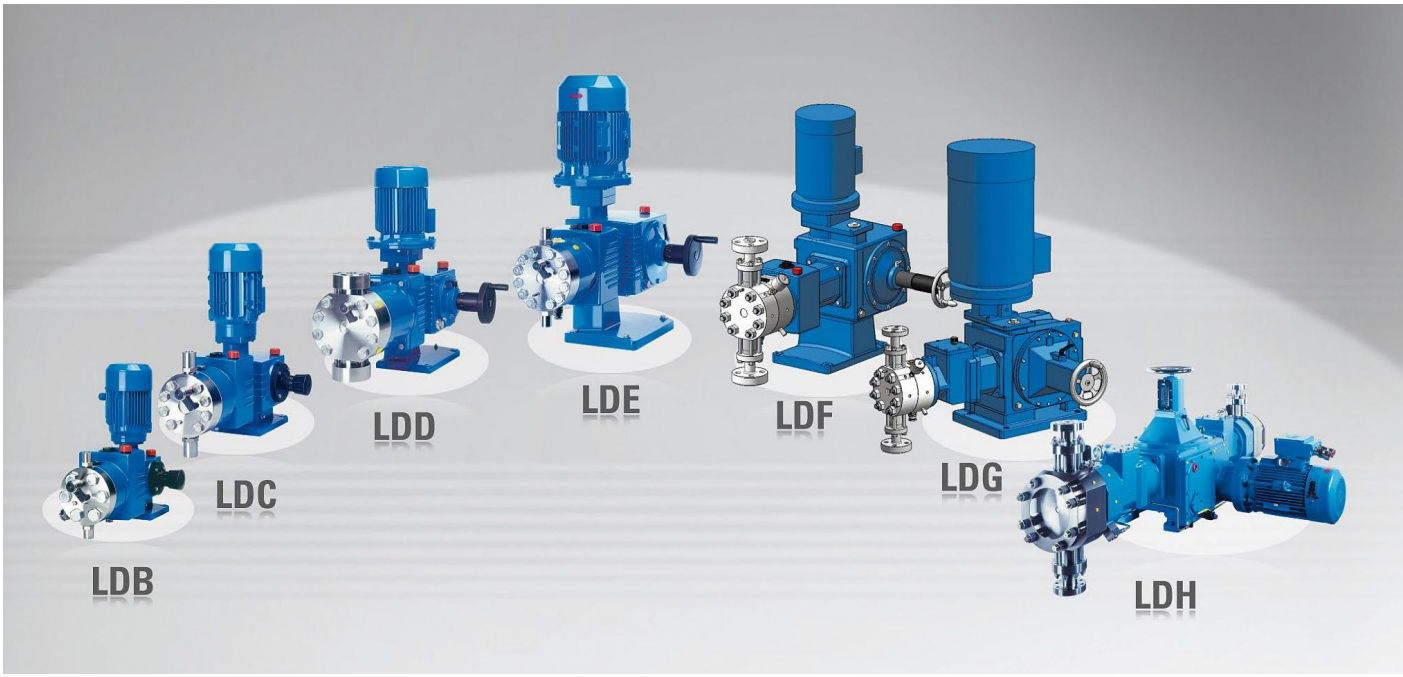

The new LEWA variable eccentric pump drive types LDF and LDG are closing the loop to LEWA process diaphragm pumps.

For tightness and safety: LEWA ecoflow technology

The construction principle ensures that the pump head's diaphragm always works in the optimum operating range. This explains the extremely high operating safety of LEWA ecoflow.

LEWA ecoflow:
Advantage through the patented DPS (diaphragm protection system)
Diaphragm pumps are used when freedom from leaks and operational safety are required, particularly in the case of fluids that are hazardous, abrasive, polluting or sensitive. In order to keep the load on the diaphragm as low as possible, the diaphragm in LEWA ecoflow is actuated hydraulically. Together with the DPS (diaphragm protection system), a long diaphragm service life can be ensured.

Low-wear valves for the widest range of tasks
Operational safety and the risk of faults are crucially dependent on the quality of the valves. The valve design is, therefore, tailored to the respective application. Profit from our decades of experience in this field.

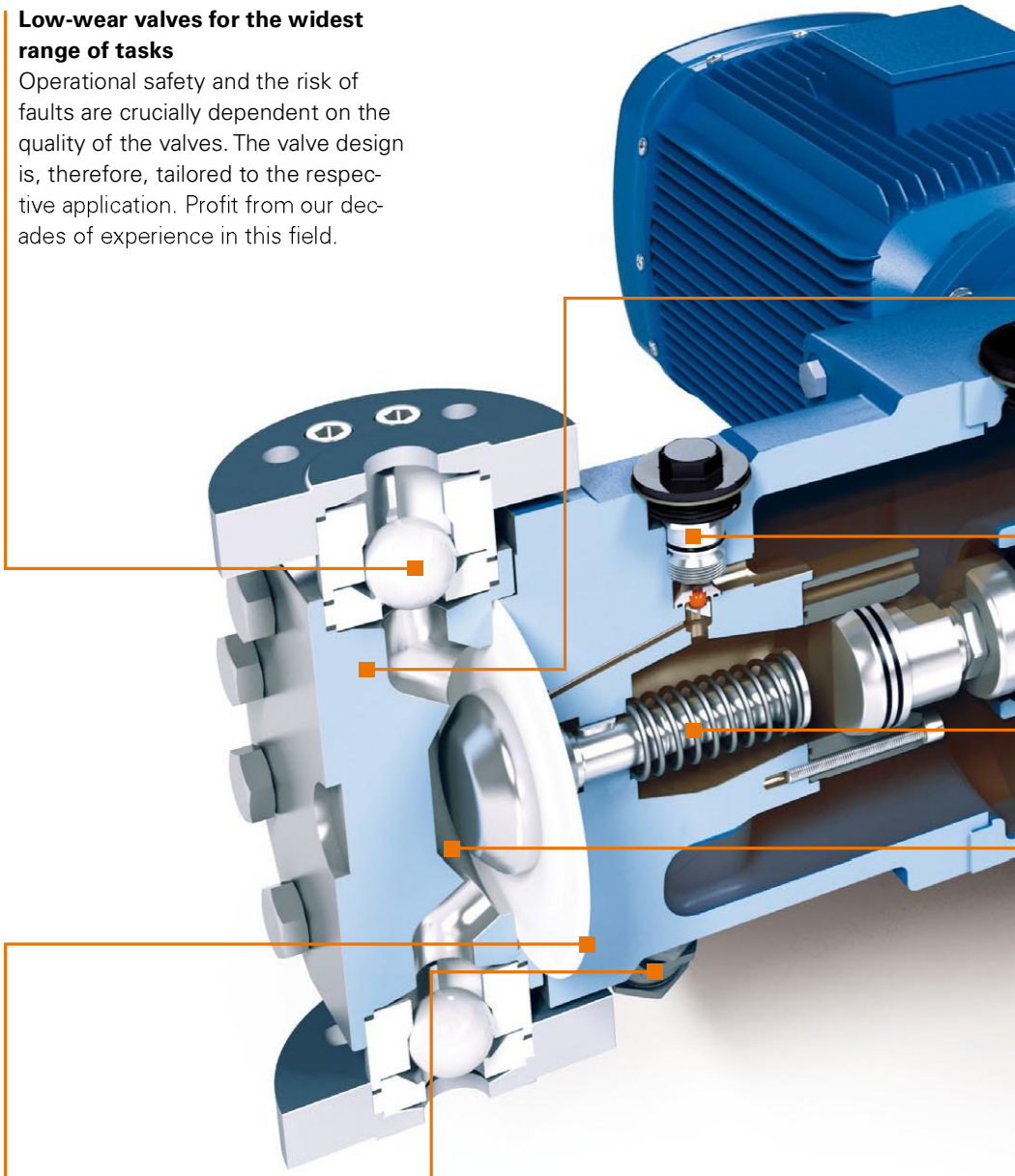

Diaphragm monitoring system: for reliable status indication
If a diaphragm is damaged, this will be reliably and immediately indicated by the standard diaphragm monitoring system. Nevertheless, the pump can continue to be operated so that the production process can be finished without risk. Signalling takes place using a pressure switch, pressure gauge or contact pressure gauge.

Pressure limiting valve
A pressure limiting valve prevents possible pump overload situations. With LEWA ecoflow, these can be set individually.

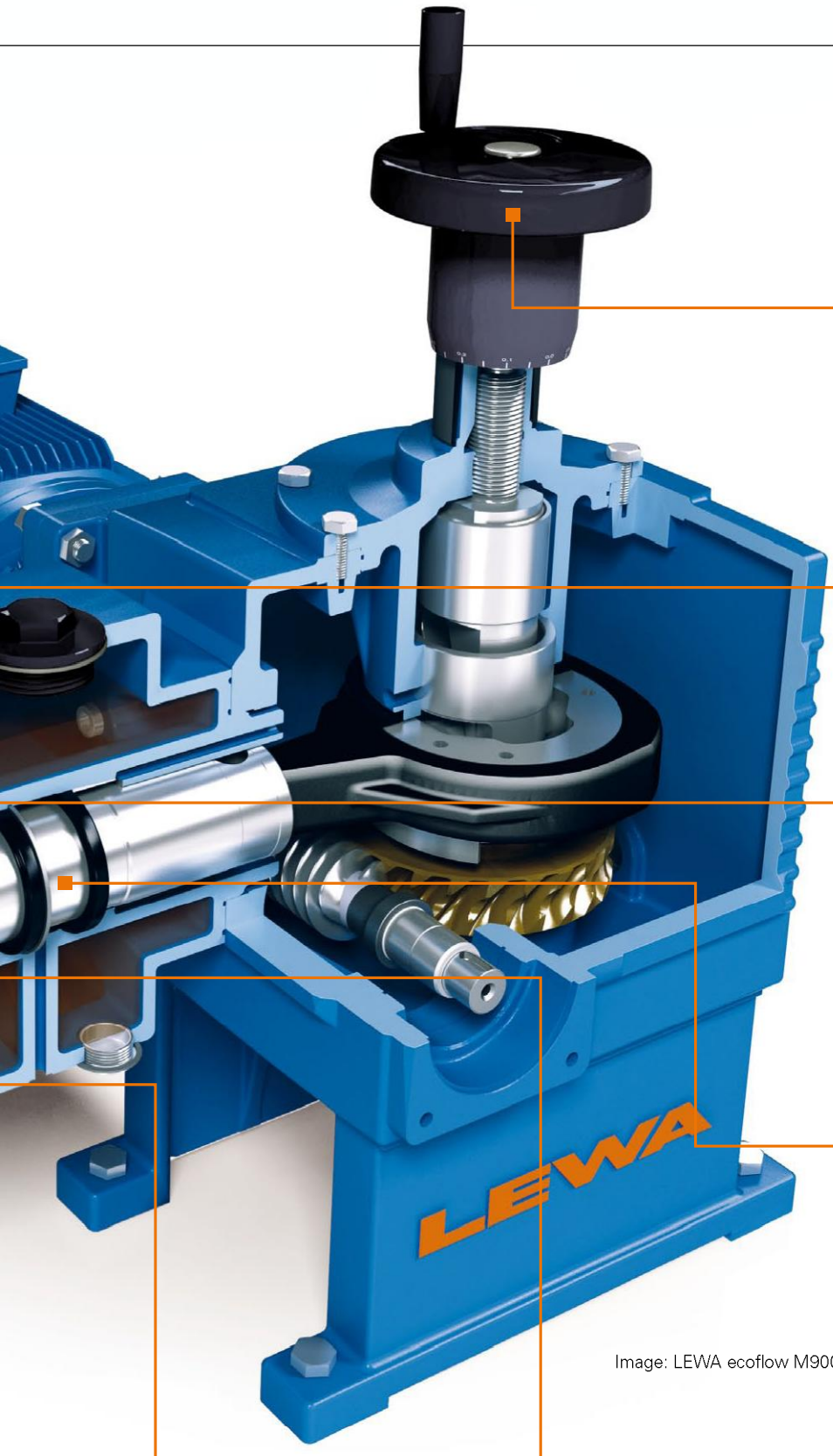

Image: LEWA ecoflow M900

High metering accuracy, gentle delivery
The metering pumps provide high metering accuracy and gentle delivery; their stroke can be adjusted (manually, electrically or pneumatically), as can the stroke frequency by means of a frequency inverter. The reproducibility of the settings is better than ±1%.

The right material for every fluid
Stainless steel 1.4571 (316Ti) is used as our standard material.
Other material options such as 2.4610 (Hastelloy) or titanium are also possible.

Leakage replenishment valve
Any internal leakage in the hydraulic fluid area of the piston is balanced through a snifting valve.

Separation of hydraulic and drive unit oils
Separating both oil circuits provides an additional protective barrier, so it is basically impossible to contaminate the drive unit with the conveyed fluid.

Minimum dead space, short dwell time
Through structural optimization of the pump head, the volume of process fluid in the work space can be kept low. The fluid flow is designed so that flushing, draining and drying processes can be carried out easily.

Simple and safe start-up
The diaphragm protection system ensures problem-free start-up even under unfavourable boundary conditions.

For the most varied requirements: Three LEWA ecoflow pump heads



Series M900: The secure one for all types of fluids
M900 is the universal high-performance series with a hydraulically actuated PTFE diaphragm and DPS (diaphragm protection system), which ensures freedom from leaks and operational safety – even in the case of operating errors.

- Up to 400 bar and + 150 °C
- For universal use, for all types of fluids
- Highest operational safety
- Very long diaphragm service life
- High metering accuracy and wide adjusting range
- Safe for suction pressure up to 400 bar
- Recommended for critical, toxic, flammable or abrasive fluids

Series M200/M400: The robust one for high pressures and temperatures
M200/M400 pump heads are specially designed for high pressures and temperatures. They have a metal diaphragm and were designed as "high pressure pump series".

- Up to 1,200 bar and + 200 °C
- Very high safety standards
- Safe against diaphragm overload and operating errors
- Suction pressure safe
- Diffusion-tight metal diaphragm
- Long diaphragm service life
- Recommended for critical, toxic, flammable or abrasive fluids in high-pressure applications

Series K: The tried and tested one for unproblematic fluids
Plunger pump heads are preferably used with simple, unproblematic fluids, and represent an economical yet high-quality solution.

- Up to 500 bar and + 400 °C
- Economical design for simple tasks
- Wear-resistant plunger seal with oxide ceramic plunger

For all types of fluids: Safe M900 diaphragm pump heads

Performance overview:

Pressure	up to 400 bar
Flow rate	up to 9 m³/h per pump head
Temperature	- 20 to + 150 °C
Viscosity	up to 100,000 mPa s

For technical data, see page 13



With their diaphragm protection system, the M900 series is not only a universal solution but also one that is operationally safe, be it for simple or critical, polluting, hazardous, sensitive, highly viscous or abrasive fluids.

The DPS (diaphragm protection system) ensures that the diaphragm always moves in the optimum operating range. Even external influences or extreme operating conditions will not bother it. This is what makes the M900 series extremely safe and particularly economical. The extremely long diaphragm service life is a crucial factor in improving life-cycle costs. Added to this are the benefits of the diaphragm monitoring system, which signals if the condition of a diaphragm is damaged. Nevertheless, the diaphragm can continue to be operated for a certain time, which provides a high level of fail-safety and thus better availability.

- Hermetically sealed, leak-free
- High metering accuracy and a wide adjusting range
- Integrated pressure limiting valve
- Diaphragm monitoring system
- Very long diaphragm service life, easy to replace
- Simple and safe start-up, even under extreme conditions
- Safe against operating errors
- Unsurpassed suction capability, comparable to a plunger pump
- Suitable for vacuum extraction
- Up to 400 bar and + 150 °C

Options

- Special valves
- Versatile connection geometries
- CIP-capable
- Hygienic designs
- Heating and cooling jacket
- Fully heated pump heads for melts
- Special materials, e.g. Hastelloys
- Diagnostic connection for online and offline monitoring
- Type-tested pressure limiting valve

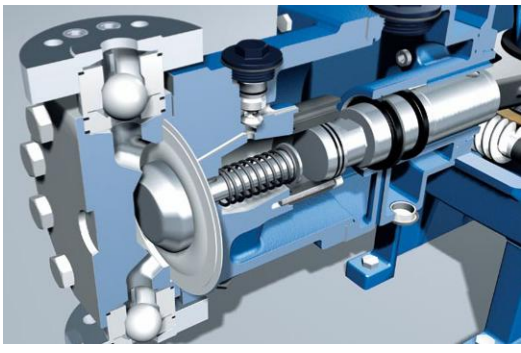

Operationally safe thanks to DPS (diaphragm protection system):
The new diaphragm control means that the diaphragm is always in the ideal operating position.

For high pressures and temperatures: The robust M200/M400 diaphragm pump heads

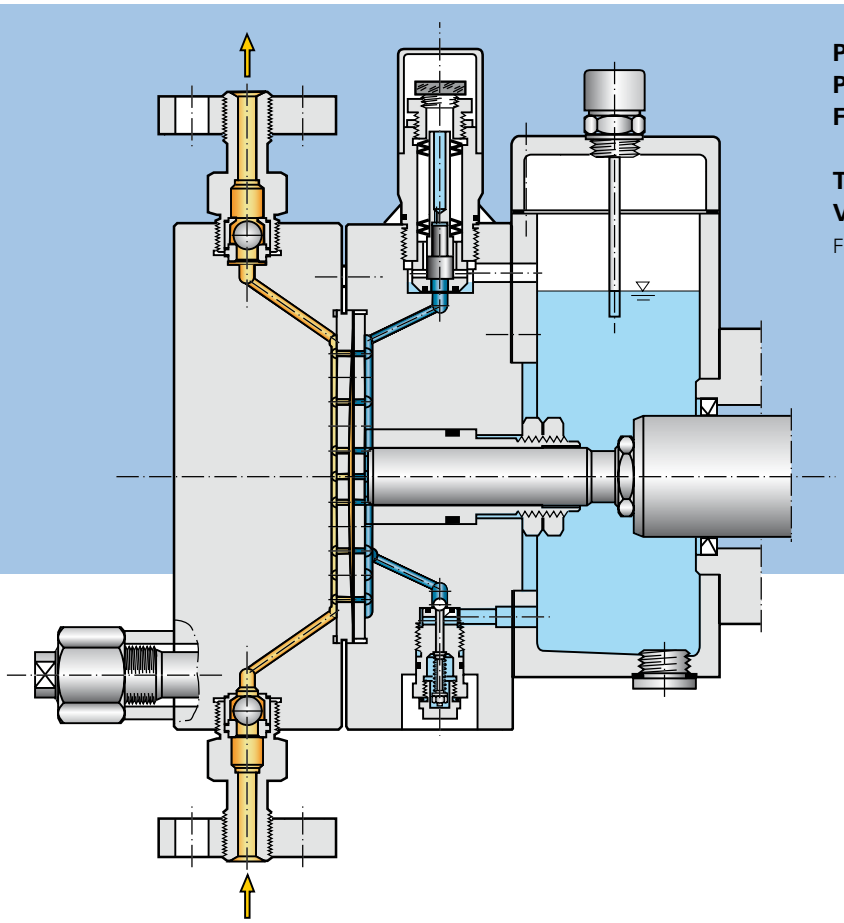

Performance overview:

Pressure	up to 1,200 bar
Flow rate	up to 2 m³/h per pump head
Temperature	+ 200 °C
Viscosity	up to 500 mPa s

For technical data, see page 13



Long service life:
The metal diaphragms receive even flow patterns and are securely protected against overdeflection.

With their metal diaphragm and solid construction, the M200/M400 series are the "high pressure pump series" for extreme applications.

Diaphragm pumps with metal diaphragms are used if high pressures or high temperatures occur or if high diffusion resistance is required, such as in nuclear technology. The series offers a very high standard of safety, particularly for high pressures up to 1,200 bar. Even under these conditions, the diaphragm support plates on both sides prevent diaphragm overloads through operating error. An additional safety bonus is provided by the diaphragm monitoring system which immediately indicates any damage to a diaphragm layer.

Nevertheless, the diaphragm can continue to be operated for a certain period, which means high fail-safety and thus better availability.

- Very high safety standards
- Secure against diaphragm overload and operating errors
- Suction pressure safe, to full operating pressure at standstill, and up to 300 bar in operation
- Diffusion-tight metal diaphragm
- Long diaphragm service life

For unproblematic fluids:
The tried and tested series K plunger pump heads

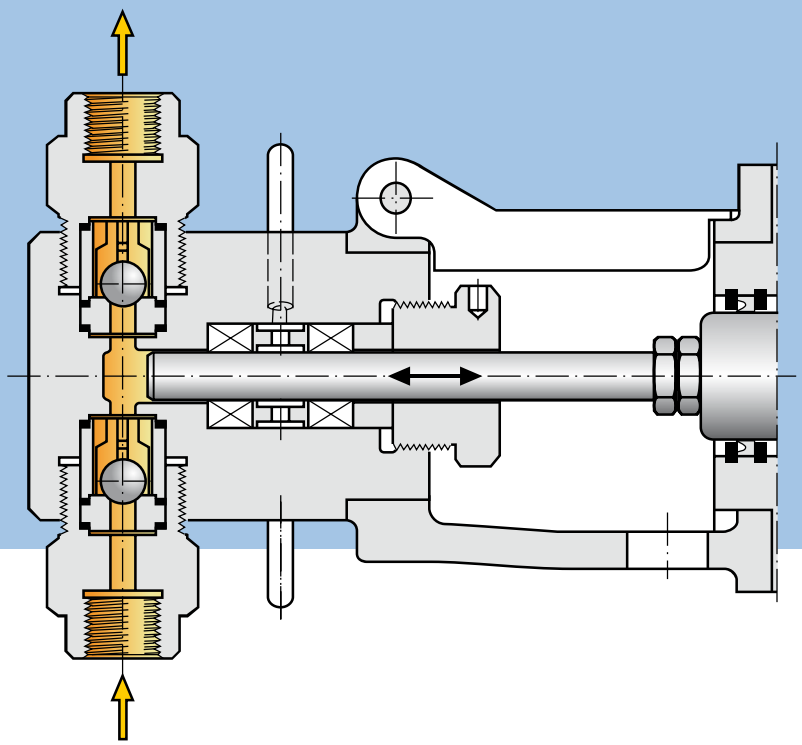

Performance overview:

Pressure	up to 500 bar
Flow rate	from 0.1 l/h – 10 m³/h per pump head
Temperature	up to + 400 °C
Viscosity	up to 100,000 mPa s

For technical data, see page 13

Series K plunger pump heads are a tried and tested, safe and economical solution for unproblematic fluids.

Series K plunger pumps are excellently suited to a whole range of metering tasks. In this construction, the fluid conveyed is displaced directly by the plunger, i.e. the plunger and the piston seal are wetted by the fluid. A high level of operational security is achieved using high-quality plunger materials and seal constructions.

- An economical solution for simple metering tasks
- Oxide ceramic plunger
- Optimum chemical resistance
- High resistance to wear

Options

- Heating or cooling jacket
- Flush connection to the fluid
- Plunger seals optimized to the fluid
- Fully heated pump head with accessible valves, for melts, for example

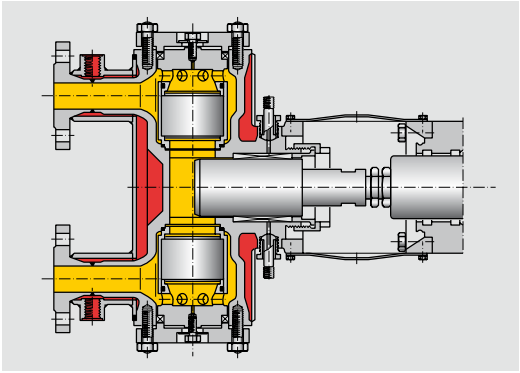

Many options are possible:
e.g. K500 fully heated pump head with accessible valves



For non-critical fluids:
Plunger pump heads are primarily used for simple, unproblematic fluids.

For low and high metering volumes: Drive units in seven frame sizes

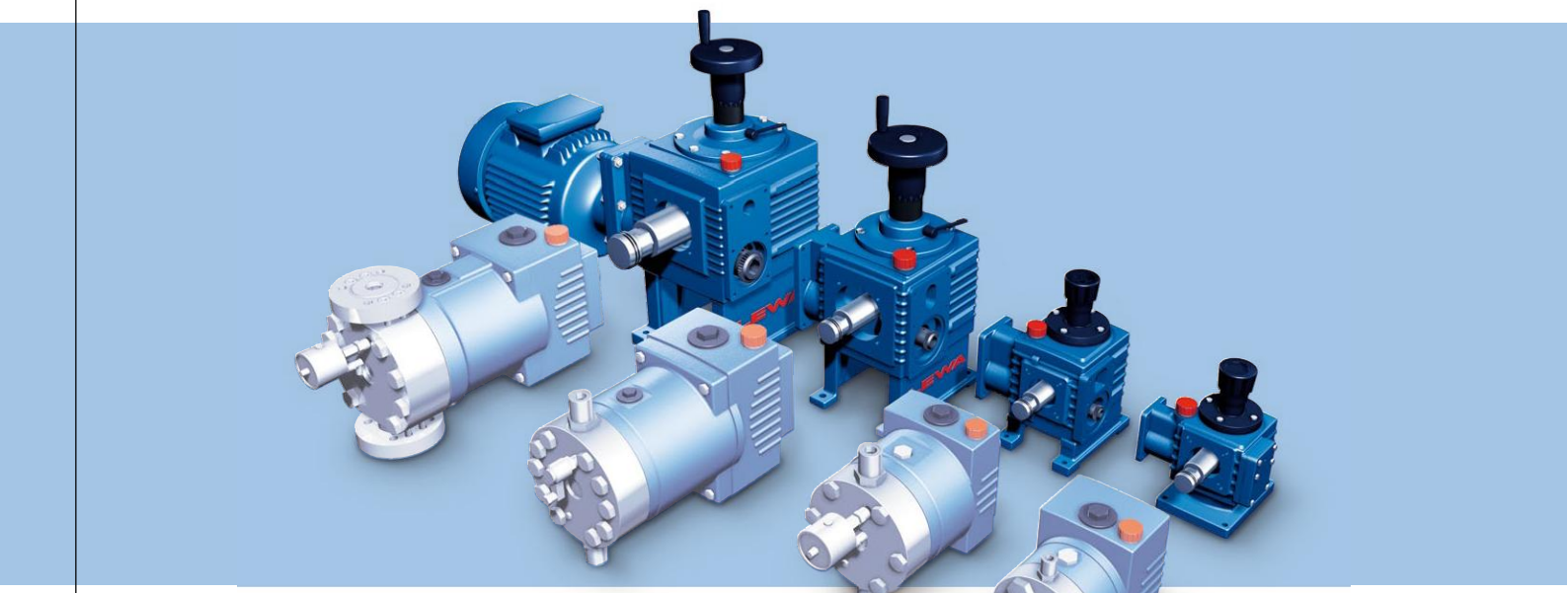

Individual drive units of different performance cover the performance range from 0.1l/h to 25m³/h per pump head.

The correct LD Series drive unit is used depending on the flow rate and the adjustment range.

In seven sizes and with different gear ratios, a wide range of performance can be covered. Using an eccentric adjustment, the flow rate can be set very accurately over a wide range; for additional stepless speed regulation, the LEWA range includes frequency inverters.

- Available as a single drive unit with a compactly mounted vertical motor
- Multiple drive units that can be combined with the same or different performance
- Electrical, pneumatic or manual stroke adjustment
- Low maintenance costs, long maintenance intervals
- High safety against overloads
- Linear, perfectly reproducible precision stroke adjustment



From single to multiple pumps:
If the performance range is increased, LEWA ecoflow pumps can be combined in almost any way.

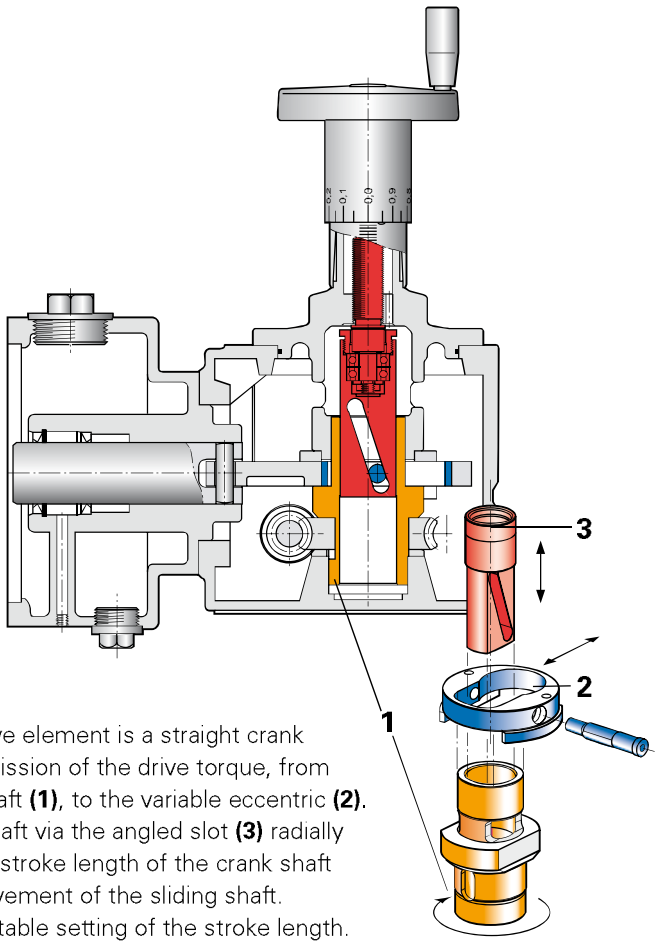

The LEWA variable eccentric drive element is a straight crank drive element with direct transmission of the drive torque, from the worm gear via the hollow shaft **(1)**, to the variable eccentric **(2)**. Axial movement of the sliding shaft via the angled slot **(3)** radially shifts the variable eccentric. The stroke length of the crank shaft changes in proportion to the movement of the sliding shaft. The result is an accurately repeatable setting of the stroke length.

For optimum configuration: The drive units options

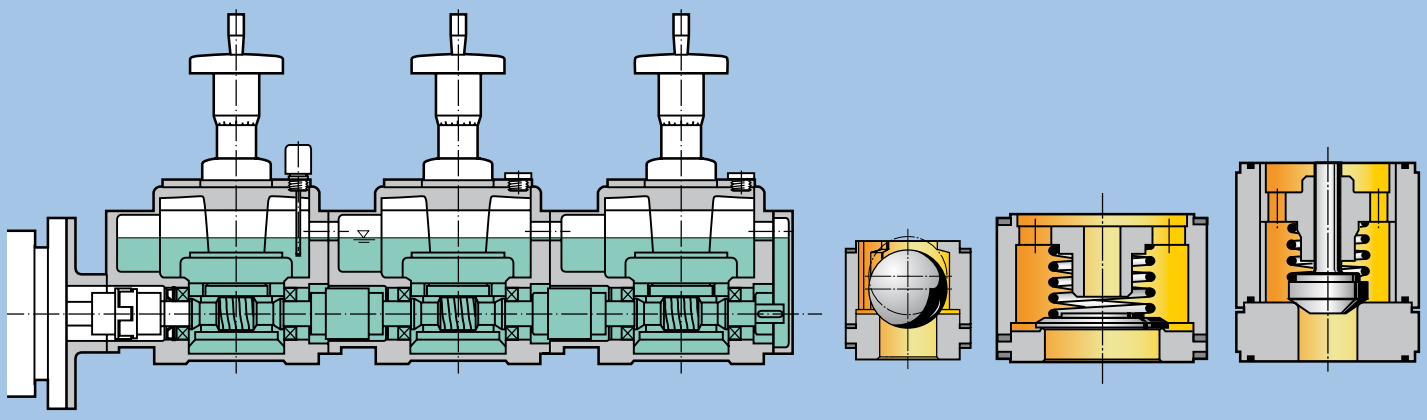

A common oil bath: LEWA ecoflow multiple pumps manage without rotary shaft seals between the elements.

LEWA ecoflow offers a wide range of very different valve designs.

Drive options

- Standard motors with IEC or NEMA connections
- With or without hazardous area protection
- Available with frequency inverters
- All types of special drives

Instrumentation/Control options

- Pump monitoring and integration in process control
- Proven controls, e.g. for proportional or batch metering

Stroke adjustment options

The drive units can be operated with a constant stroke length or with an adjustable stroke. This can be done manually, electrically or pneumatically.

Electrical stroke adjustment
- Integrated end position and overload protection
- Feedback through potentiometer or 0/4 to 20 mA signal
- Standard degree of protection is IP 67
- Positioner (optional)
- Hazardous area protection (optional)

Pneumatic stroke adjustment
- Standard control 0.2 to 1 bar
- Control and feedback through 0/4–to 20 mA signal
- Standard degree of protection is IP 54
- Optional IP 65 degree of protection
- EExiaIICT6 hazardous area protection

Valve designs

LEWA ecoflow offers a wide range of very different valve designs for every possible requirement.

Ball valves
- Standard valves for nominal diameters up to 15 mm
- Low drag coefficient
- High functional security, even when handling impure fluids or suspensions

Plate/Cone valves
- Standard valves for nominal diameters up to 25 mm
- Particularly suitable for high stroke frequencies

Other valve options
- Hardened or made of hard metal or oxide ceramic, silicon nitride for very low wear
- Double ball valves for even more safety
- Suspension valves in different designs

For extra production safety: LEWA ecoflow accessories

Intelligent accessories, such as the LEWA CMS pump monitoring system, mean you get more from your application or installation.



Conditioning Monitoring System
For extra process quality, accuracy and trouble-free operation, LEWA recommends the CMS Conditioning Monitoring System. It gives an edge by permanently recording and evaluating data. This means not only monitoring of the pumps but also optimization of the whole application. We have both mobile offline systems and online systems installed stationary.



Pulsation dampers

Pulsation dampers
Metering pumps work in pulses; on each pump stroke, fluid is accelerated and then decelerated.
Pulsation dampers can be required for two reasons:

- To prevent excessively high pressure fluctuations
- To generate a flow rate that is almost continuous

LEWA has the expertise as well as the accessories to optimally tailor pumps and installations to one another.



Safety valve

Safety valves
LEWA safety valves prevent pressure overloads in the pumps and installation. Metering pumps, which deliver by force, must always be protected with a safety valve if there is a risk that the discharge line could be closed during operation of the pump (e.g. by sedimentation in the pipe).
The hydraulically coupled LEWA ecoflow diaphragm pumps are equipped with a relief valve to protect the pump as standard.

Strainers
Many fluids being conveyed contain impurities. These can lead to faults in the metering pump valves – from slight fluctuations in the metered flow to complete failure. In order to reliably avoid these effects, LEWA recommends fitting strainers in the suction pipelines.

Pressure retaining valves
LEWA pressure retaining valves prevent uncontrolled flow through the pumps (excessive delivery). This occurs when the pressure on the suction flange is greater than on the discharge flange, which can be caused either statically or dynamically. Generally the holding pressures are low.

Expert installation
Let LEWA advise you on matters of pump design and expert installation. We are also happy to supply you with a fully-functional system or offer suitable components or a complete installation with suction and discharge pipe work.

At a glance:
Technical data LEWA ecoflow

Performance overview
To determine the size of the drive unit. The characteristic curves apply to a single pump. Flow rate details per pump head.

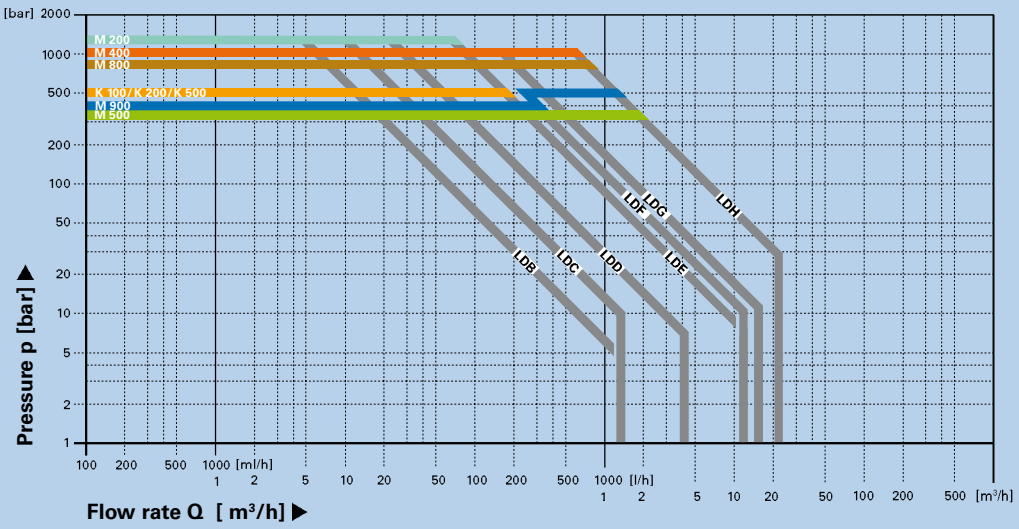

Assembly dimensions

Type	L [mm]	B [mm]	ΔB [mm]	H [mm]
LDB	400	400	185	260
LDC	450	500	220	320
LDD	700	750	280	610
LDE	800	900	350	690
LDF	1130	900	430	940
LDG	1300	1300	490	1000
LDH/LDHB	2100	1800	717	1500

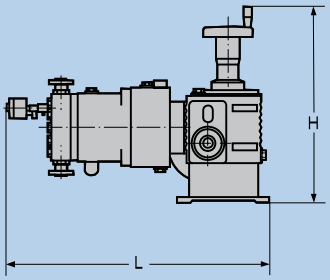

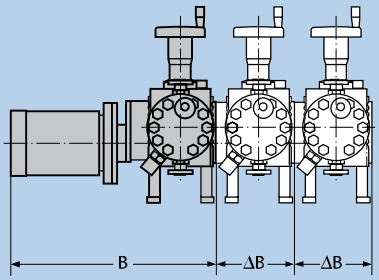

The dimensions differ depending on the pump head fitted.

Enquiry data for designing a pump

To design your special pump, we need the basic details on the right.

LEWA GmbH
Phone +49 7152 14-0
Fax +49 7152 14-1303
lewa@lewa.de

We will answer your inquiry immediately.

Metered fluid

Flow rate required	.....	[l/h]
Operating pressure at discharge flange	.....	[bar] abs
Operating pressure at suction flange	.....	[bar] abs
Operating temperature (OT) max./min.	.....	[°C]
Density at OT	.....	[g/cm³]
Viscosity at OT	.....	[mPa · s = cP]
Solids content / Solids density	.....	[%/g/cm³]
Solids grain size / Solids hardness	.....	[mm/Mohs]

Motor data

Hazardous area protection	.....	
Degree of protection	.....	
Voltage	.....	[V]
Current type	.....	
Mains frequency	.....	

For every occasion: The LEWA product range



LEWA micro-flow metering pumps



LEWA ecodos

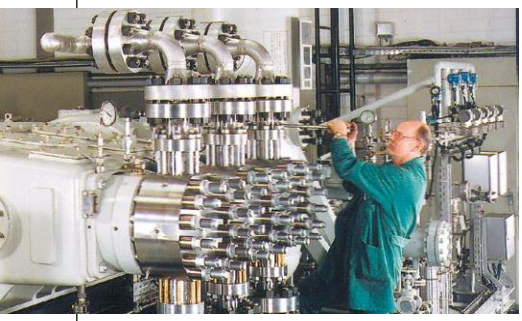

LEWA triplex process diaphragm pumps



LEWA metering systems
and chemical injection packages

For laboratories & pilot plants:
LEWA micro-flow pumps
These micro-flow metering pumps with hydraulically actuated metal diaphragms are primarily used in laboratories and for test procedures in pilot plants.

Performance range	
Flow rate	up to 57.5 l/h
Discharge pressure	up to 560 bar

For low pressures:
LEWA ecodos metering pumps
Diaphragm metering pumps for low pressure duty, using a mechanically actuated PTFE quadruple diaphragm for high security. Can also be combined as a multiple pump.

Performance range	
Flow rate	up to 1.5 m^3/h per pump head
Discharge pressure	up to 20 bar

For sterile applications:
LEWA Sanitary & Hygienic
LEWA supplies special sanitary and hygienic diaphragm pumps for metering tasks in hygienic, aseptic or sterile procedures, whether for food and beverages or for pharmaceuticals and personal care.

Performance range	
Flow rate	up to 6 m^3/h per pump head
Discharge pressure	up to 500 bar

For more information, please request our individual brochures.

For high pressures:
LEWA process diaphragm pumps
The leak-free LEWA process diaphragm pumps for high flow rates are the tightness standard in high-pressure process technology. Using LEWA triplex process diaphragm pumps, even critical, toxic or flammable liquids can be conveyed safely. Even extremely low viscous, non-lubricating fluids or abrasive suspensions can be handled successfully.

Performance range	
Flow rate	up to 180 m^3/h
Discharge pressure	up to 1,200 bar

For closed control loops:
LEWA metering systems
LEWA is the first point of contact in the market for high-performance yet economically designed metering systems. These are modular combinations of pumps, valves and controls for stroke length and speed, flow meters (volume or mass flow) and controllers. The metered flow is adjusted in a closed control loop.

For process automation:
LEWA metering packages
LEWA metering and mixing packages for process automation are available either as standard variants ready for connection, or designed by LEWA specifically for the customer's request. LEWA can supply complete, ready to operate problem solutions. Our services range from engineering to commissioning – including individual package controls, process visualisation, logging of operational data and external interfaces to the process guiding system.

For the highest demands: LEWA engineering & services





Profit from LEWA's expertise during the planning stage, the design and during operation.

Consultancy & engineering for particular requirements

With over 10,000 successful applications, LEWA has a very wide range of application expertise around the world. Profit from our experience. We see ourselves as a supplier of solutions and systems for any application involving the conveying, metering and mixing of gases and liquids. We can thus provide tailor-made solutions, from the smallest single unit to the largest inline installations, as well as process engineering consultancy for complex processes. Solutions that meet particular process requirements.

- Fluid assessment
- Installation calculations
- Individually designed concepts
- Commissioning and service
- Seminars and on-site trainings

Global service network for greater availability

LEWA follows its customers around the world. With numerous subsidiaries and authorized agencies, you will find us in all major countries. This local presence is also critical for the successful implementation of international projects. Regular maintenance guarantees the reliability and, particularly, the profitability of a pump system. This is where we can help out with our comprehensive expertise. We look after LEWA installations – worldwide. And we ensure that original spare parts can be supplied and will remain available for many years.



Always close to site: whether for consultancy, maintenance or servicing, local presence takes top priority at LEWA.



For the toughest environments: High levels of reliability even when used under harsh conditions.

Creating Fluid Solutions

A MEMBER OF NIKKISO

LEWA pumps + systems

LEWA proven services and technologies

Germany / Headquarters
LEWA GmbH
Ulmer Str. 10
71229 Leonberg
Phone +49 7152 14-0
Fax +49 7152 14-1303
lewa@lewa.de
www.lewa.de

Japan / Headquarters
NIKKISO CO. LTD.
Yebisu Garden Place Tower 22nd Floor
20-3, Ebisu 4-Chome, Shibuya-ku
Tokyo 150-6022
Phone +81 3 3443-3711
Fax +81 3 3473-4963
www.nikkiso.com



Contacts of LEWA's numerous affiliated companies and representatives can be found on **www.lewa.com**

Customized solutions for metering and process technology

For more than 50 years, LEWA has set the technical trends of metering pumps and systems. LEWA offers a single-source solution to handling complex metering and mixing tasks – ranging from individual pump configuration, basic and detailed system engineering and pretesting to onsite commissioning and maintenance services.

Good causes to rely on:

- A solution for your special application: from process analysis to global service
- Highest process safety: individual pump configuration and state-of-the-art design
- International engineering and project competencies
- Highest reliability: developed for continuous operation
- Low lifetime costs: reduced energy consumption and low-wear design
- Compliance with international standards, e.g. API, ASME, GOST-R, FDA, EHEDG, 3A, TÜV
- Comprehensive reference list

Areas of expertise:

Oil & Gas
Gas Odorization
Refinery
Petro-chemicals
Chemicals
Plastics
Cleaning & Detergents
Personal Care
Pharma & Biotechnology
Food & Beverages
Energy Utilities

Your local representative: