cadwork®

Your complete 3D CAD/CAM solution for all fields of wood construction

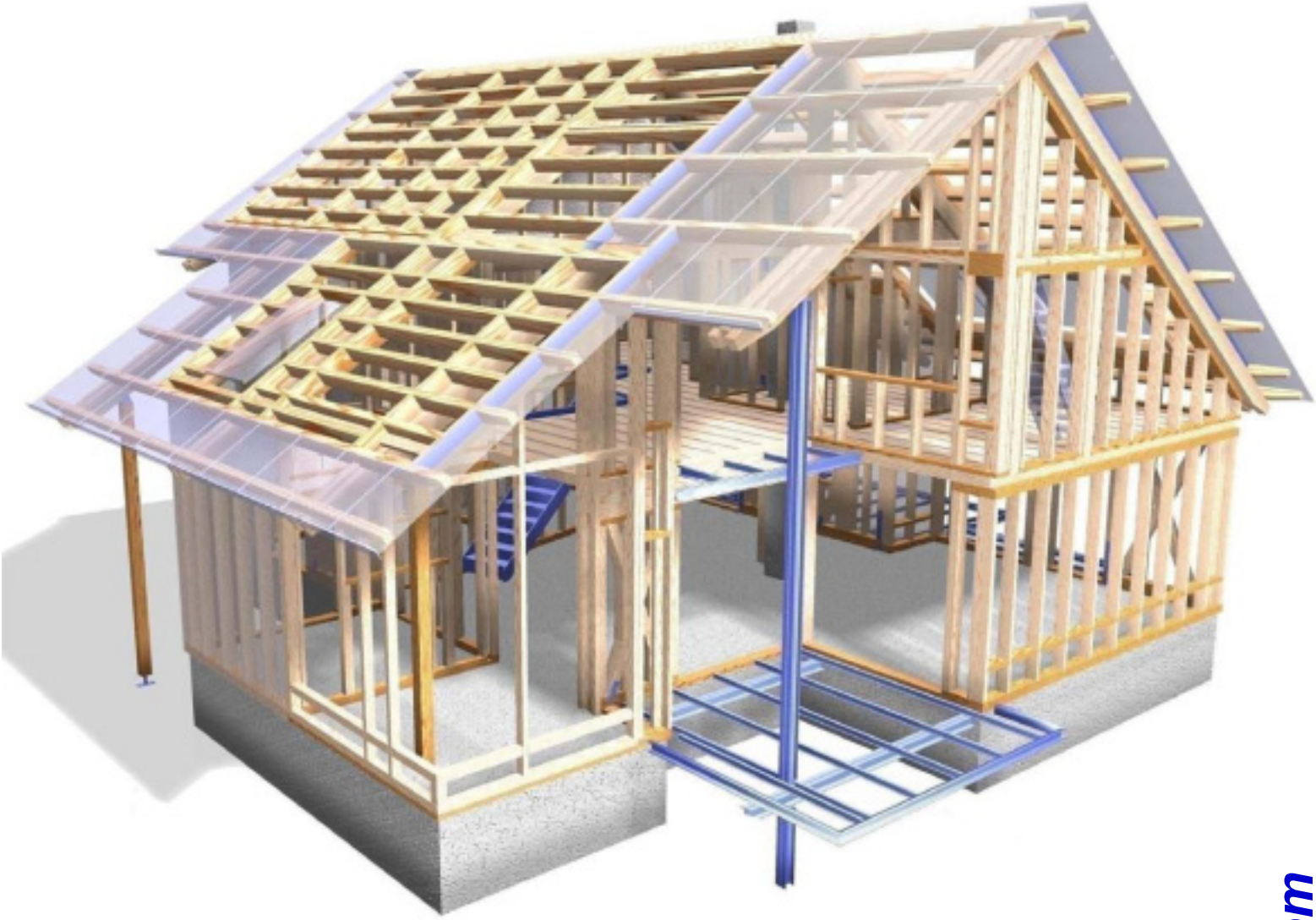

Timber frame
Hand fabrication
Machine fabrication
Timber engineering
Glulam
Prefab construction
Stud construction

Log building
SIP/X-Lam construction
Panel manufacturing
Exhibition design
Architecture
Steel construction
Solid construction

Survey and layout
Restoration
Cabinet making
Interior design
Carpentry
Staircase design
Engineering

cadwork.com

The reference in wood construction

... about cadwork and the team

cadwork - the market leader for CAD / CAM solutions in the wood building industry

cadwork has been in the process of development since 1980 and is the market leader for CAD/CAM solutions in the wood building industry. With over 3000 clients and more than 7000 licenses in the field of wood construction alone, cadwork covers substantial sections of this market.

Since 1988 a total of 18 branches and sales offices in Switzerland, Germany, Austria, France, Spain, Russia, Poland, the Czech Republic and Canada were founded.

Our clients are present in most European countries, the United States, Canada, Australia, Russia and other parts of the world. Our international presence and know-how guarantee for a solid investment.

Thousands of wooden constructions like timber frames, prefabricated panels, modular homes, log constructions, solid wood walls, SIP's, glulam's and any desired hybrid combination as well as innovative engineered wood constructions have already been designed with cadwork worldwide. Our 3D software can manage all these systems in an automated fashion and as detailed as you need.

Thanks to automation, planning and manufacturing becomes easier. With cadwork, you realize all your projects and will never be deadlocked.
Send production data directly from your building information model (BIM) to the current machining centers and or assembly lines.

With automatic process recognition, manufacturing may be performed on various machines. Automated processing of assembly drawings, parts lists, piece by piece drawings, wall assemblies and detail parts also allow small businesses to plan construction of individual turnkey wood houses economically.

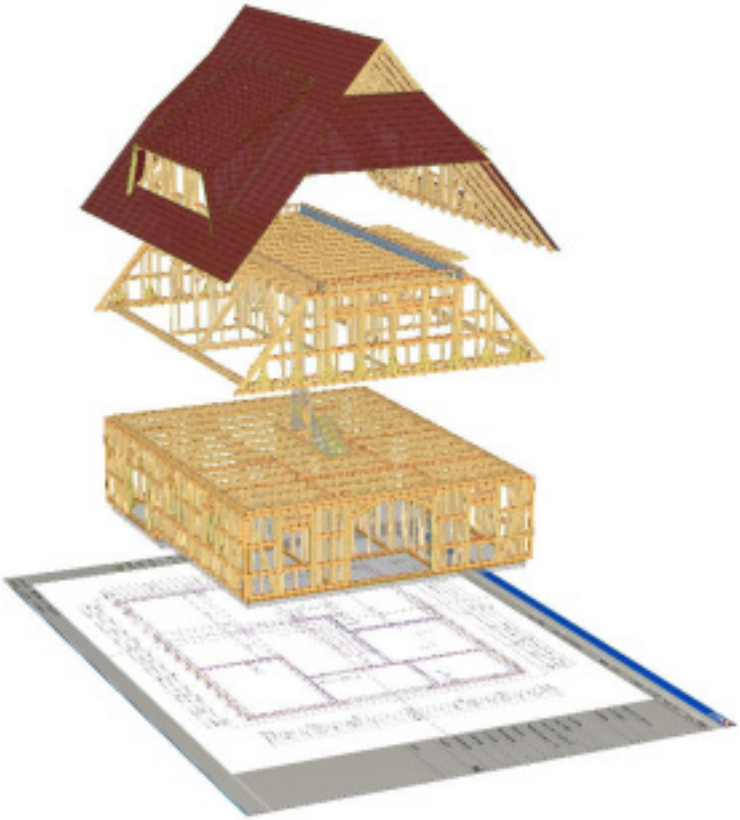

Do you know that...

...about 90% of our 3000+ clients are wood construction firms using cadwork as an integrated production tool for all fields of wood construction and have chosen to benefit from a competitive edge?

...cadwork is so easy to learn and logical, after a 2 days training, you can start working successfully on your own projects?

...after a basic training, you can use a free trial version for 2 months including hotline in order to test our state of the art products in your own environnement and make sure it meets your expectations?

...with the cadwork Basic Timberpack all types of constructions can be quickly and freely modeled, parts list and shop drawings exported?

...all parts can be easily edited without any detour through a dialog?

...the student version is a full Standard Timberpack that runs for the whole education period and can be extended in most schools 6 months for free?

Let us convince you! Contact us for a tailored demonstration or a training.

Architecture

It doesn't matter if you want perspective views or renderings for drafts or concept drawings or floor plans and elevations for permit drawings. Even with the cadwork basic package you can cover all your architectural needs. A powerful layer manager, extensive libraries and architectural dimension styles allow you to create amazing plans easily and quickly.

Developing a 3d model and following the building process in a real 3d space will convince the new home owner. At the same time the 3d model is used to automatically create sections and elevation drawings.

cadwork directly interfaces to the **rendering software Artlantis**. Export all data such as geometry, textures, and axis directions and quickly create photorealistic renderings or animations without redefining materials or textures.

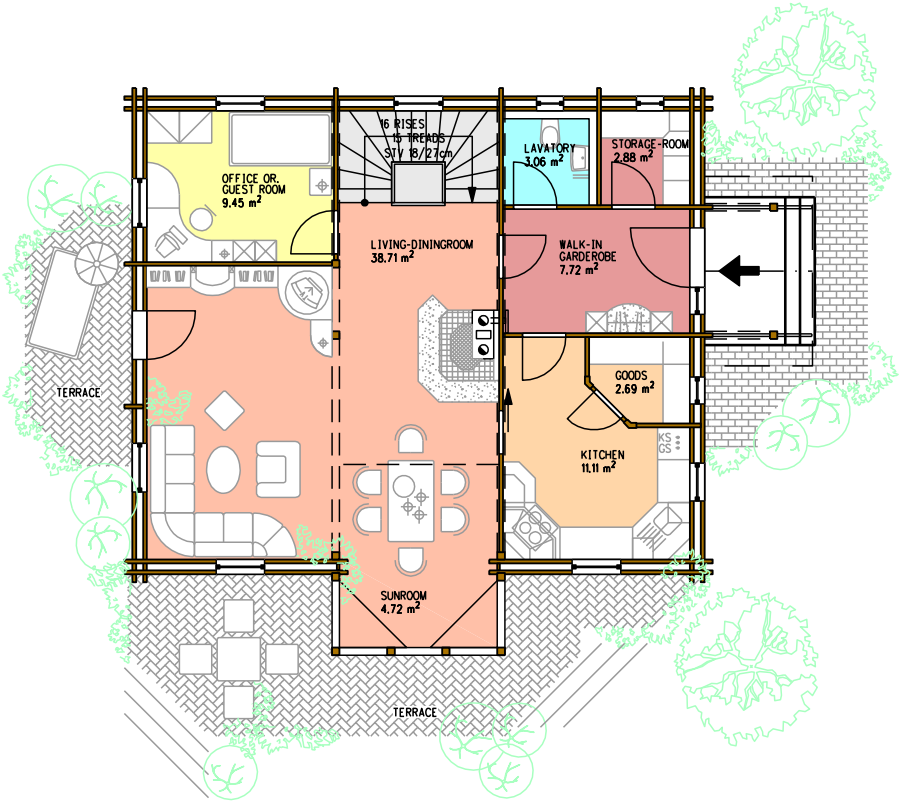

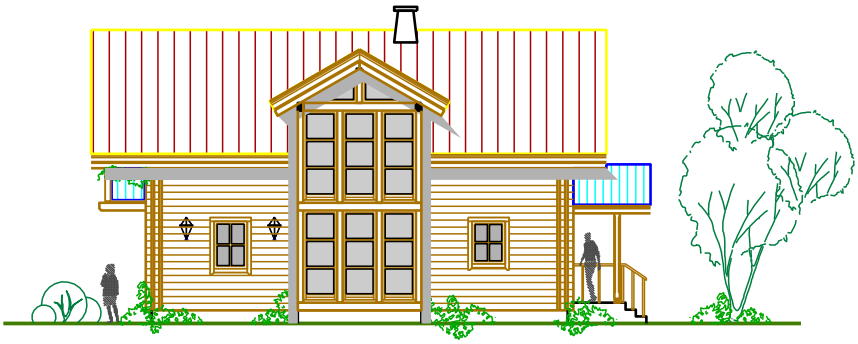

For architecture and planning, for example, the user has the following functionalities at his disposal:

- Layering
- Drawing elements and editing functions
- Auxiliary lines and measurement functions
- Libraries
- Direct connection to cadwork 3D
- Management of any desired number of plans and scales in one file
- Direct data exchange with programs such as Word or Excel (texts and graphics)
- reading PDFs und many other file formats with Drag & Drop
- Interfaces with other programs - for example DXF/DWG or IFC

cadwork 3D - Design

cadwork 3D is the core of the program package and is used for the planning, user-defined design and output of all production-related drawings, lists & machine data.

For this purpose, cadwork 3D provides tools that are easy and simple to use for any designer, technician, engineer or architect. In the future, then, you will have the entire range of timber construction and general building at your disposal. This is a tremendous market advantage in an age where flexibility, speed and quality in engineering have become crucial to any building firm's survival.

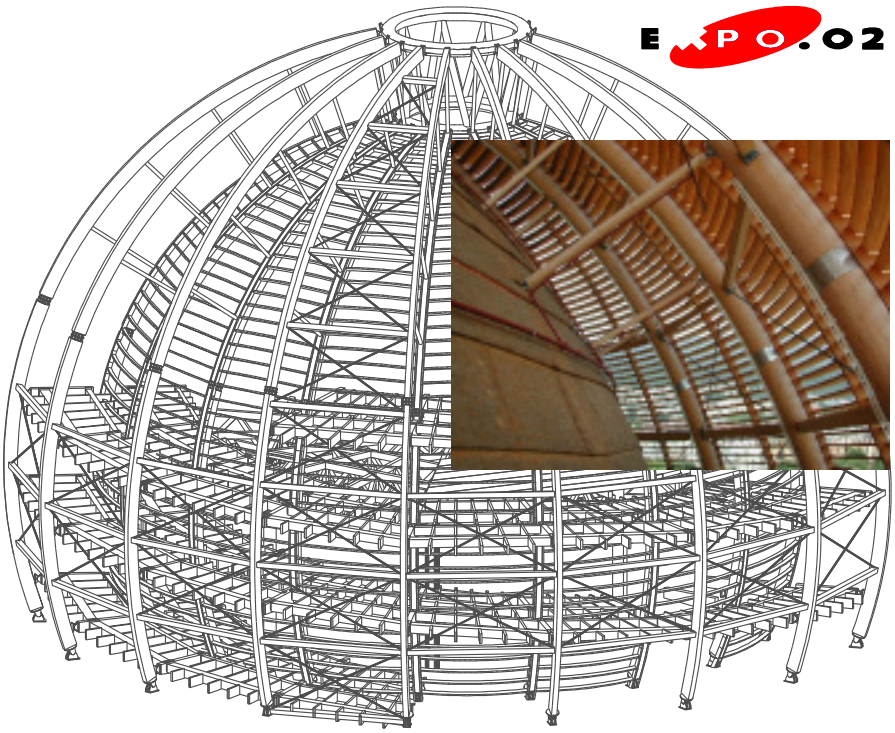

Equilibrium Palace at the EXPO 2002 in Neuchâtel, Switzerland
Groupe H & Charpente Concept, CH-Geneva

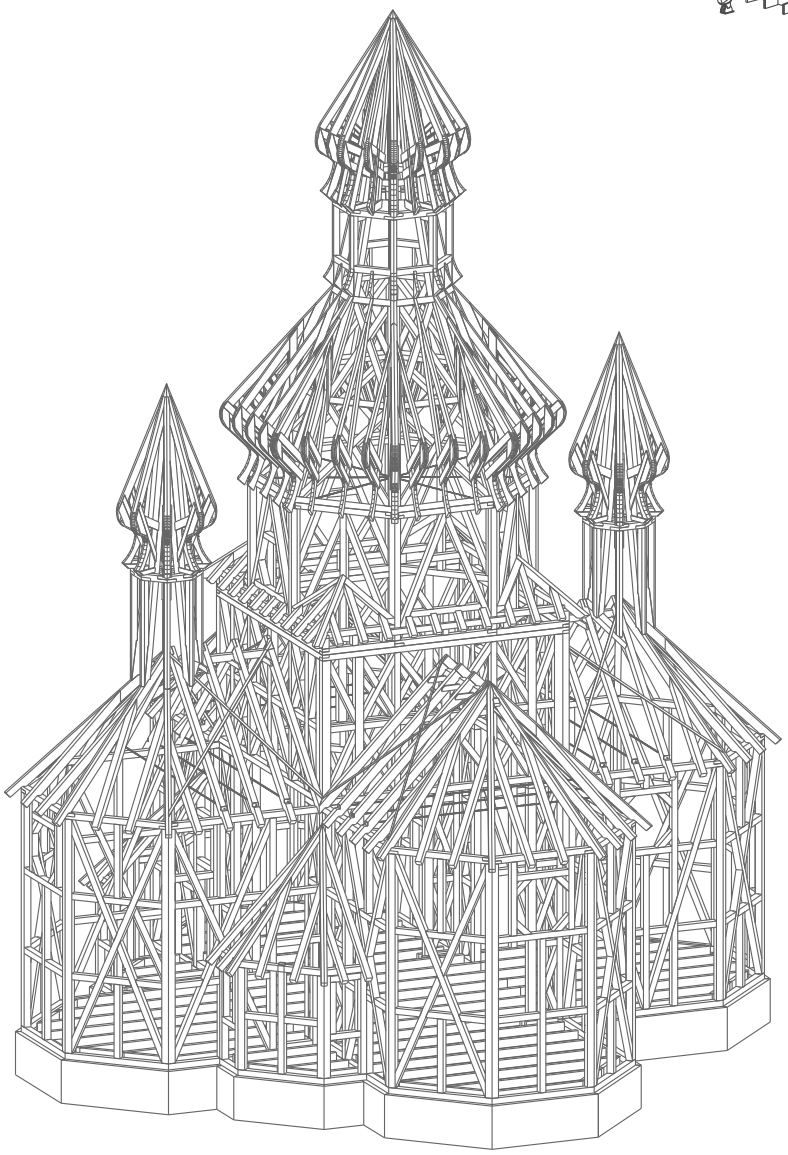

Church in Piski, Ukraine
Construction: Charpentes Services M. Appel, F
and CAD-Service Euchner, D

All conceivable forms of construction and types of components can be freely combined with each other.

Simple rectangular or curved sections, steel, timber or special sections and oblique, double-curved original designs are available to the designer for every project. Naturally this also includes catalogs of connectors from reputable manufacturers or from libraries created by the user himself. All components can be drafted as volumes in a user-defined conjunction with each other. The versatility of the possibilities for editing and the ease and efficiency of handling have made cadwork 3D an indispensable tool for every planner.

Areas of application now extend from timber framing or carpentry tasks with manual fabrication or machine-joinery and all types of wooden buildings, engineered timber construction, gluelam construction, steel, exhibition, conservatories and staircase construction up to interesting restoration and renovation projects.

Libraries

Reputable manufacturers' catalogs of connectors are included as standard items in cadwork. The users own libraries of connectors or categories of fasteners can be created as desired.

Users can set up their own libraries with joining methods or groups of joining methods, with central access to all the workstations in the network.

Details of all joining methods, naturally including your own, are included in the corresponding lists.

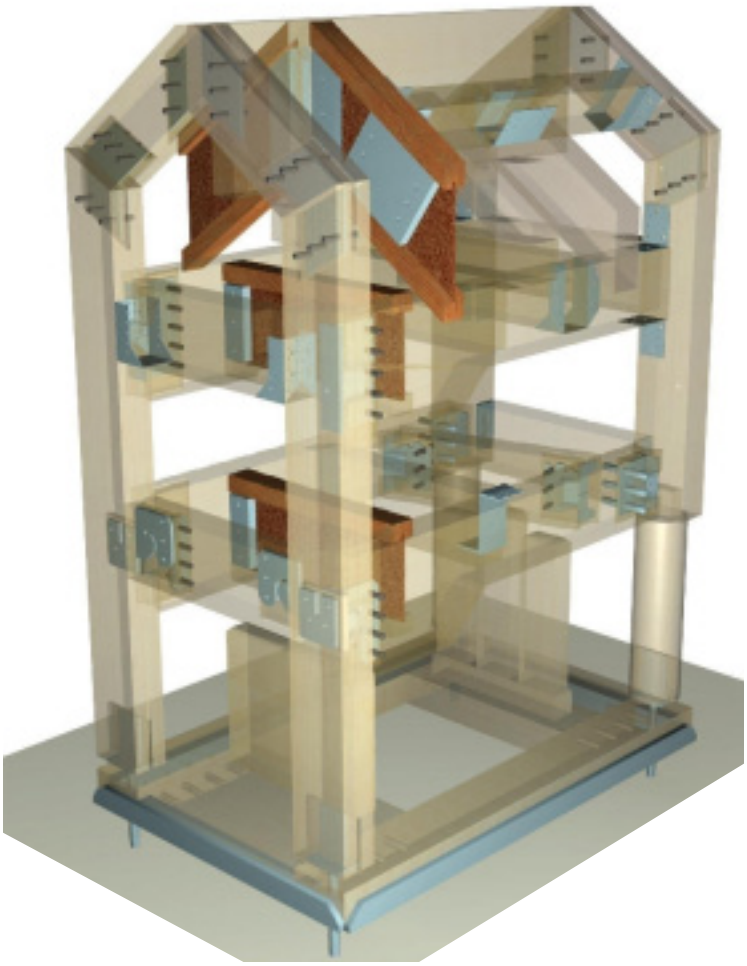

Simpson-Strongtie-connectors - CNC machine: Hundegger K2

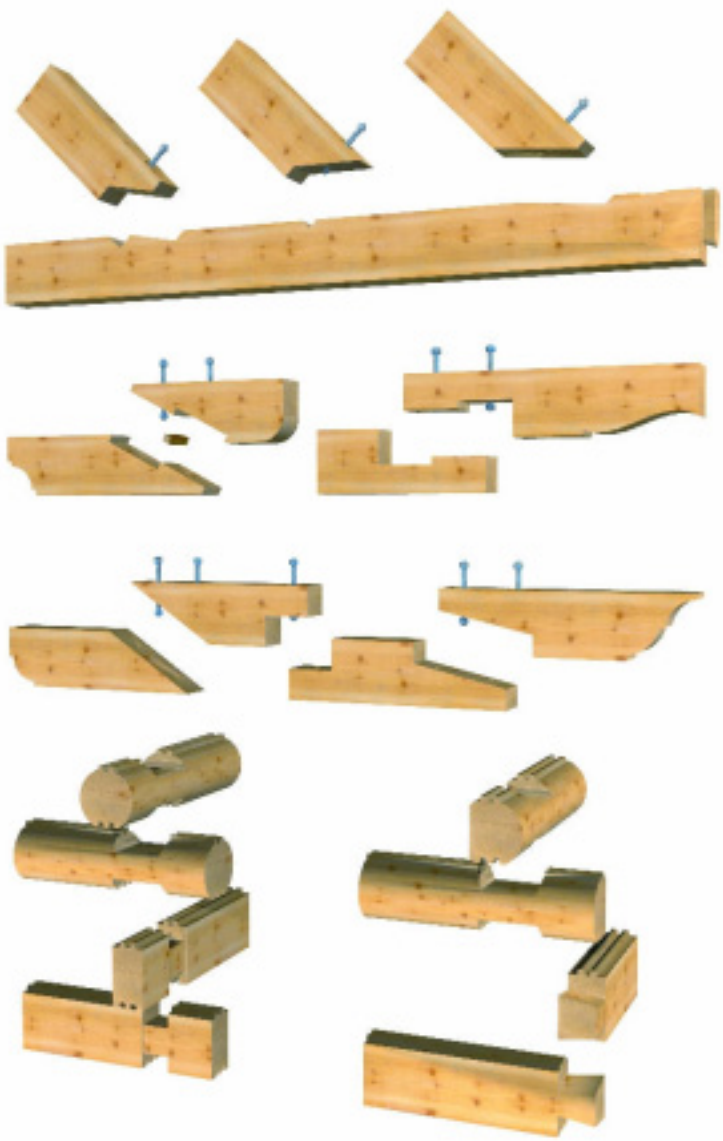

Examples of timber to timber joinery in cadwork

Timber-timber-joinery

A series of convenient, automated tools are available for all wood-to-wood joints such as shoulder joints, notched joints, Gerber joints, scarf joints, loghouse-type notched joints, etc.

Items such as mortise joints (with or without wooden pins), dovetail joints, butt joints, profile heads and others are added to the ends of members as parameter-configured terminal-types, and are graphically illustrated.

All processing of adjacent elements change automatically whenever components with endtypes are moved, copied or deleted.

Element module - Automatic panel drawings

Element module for timber buildings

cadwork Element module means that you can create complete wall, floor or roof systems from the fields of wood panel construction, stud frame construction, log home construction, SIPS and similar system methods.

Combined systems are easy to define. The number of layers is unlimited. Companies' own connections, windows or doorways, and even the fasteners themselves, can be saved in detail. These are then available as system details for automatic output.

Maisons Laprise, Quebec

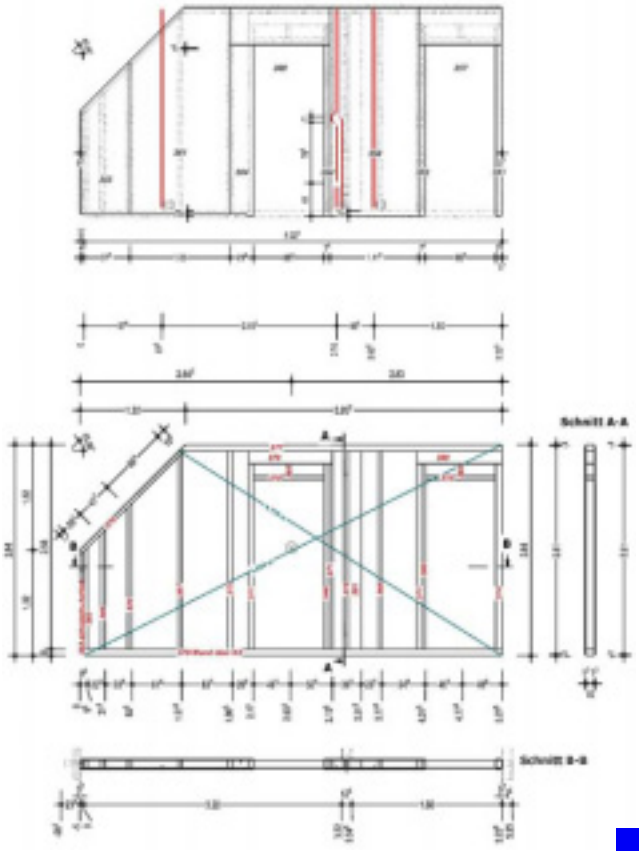

automatic wall drawings

Detailed points and their output

Detailed points are created and saved using familiar tools for design in 3D.

This means that the task of filling in endless, complicated tables of figures and hours of programming work that you have to charge for, are a thing of the past. All solutions we supply can be freely modified or expanded by you. You can directly adapt the architect's plan and use it as the basis for your prefabricated design. Various interfaces can be used in the process (Arcon's HLI interface, DWG/DXF, SAT, IFC...).

The output of the Element module are standard 3D modells. With cadwork 3D functionalities now special components, points of detail and so on can be edited, supplemented and integrated.

There is an automatic output of listings, finished dimensions and formatting for panel drawings and CNC joinery machines or multi-function bridges for panels.

cadwork Roof

cadwork Roof is a powerful wood construction program in which users can quickly create complex timber trusses thanks to smart automatic functions.

Direct incorporation into the CAD system.

The true strength of this program lies in its ability to mesh seamlessly and directly with the cadwork 2D and cadwork 3D modules.

cadwork Roof simplifies enormously the complex task of creating roof layouts. You just have to determine the direction in the plan view of each roof profile and then enter the profile values (roof pitch, plate bearing elevations, ridge elevations, basic member sizes, overhang, etc.) in the popup window displayed on-screen.
The program then calculates the distribution layout of the laths. The type of roof covering that has been selected is also taken into account.
A complete list is then displayed with a breakdown of the number of roof tiles, a running count of the linear footage corresponding to the ridge line, edge line, barge board line etc.

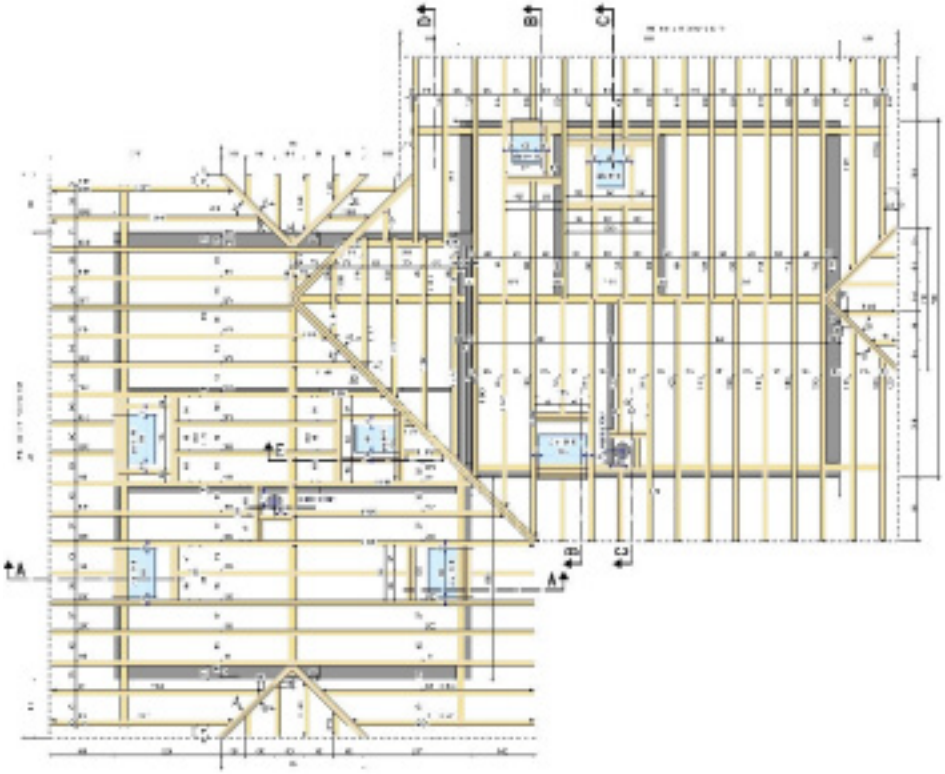

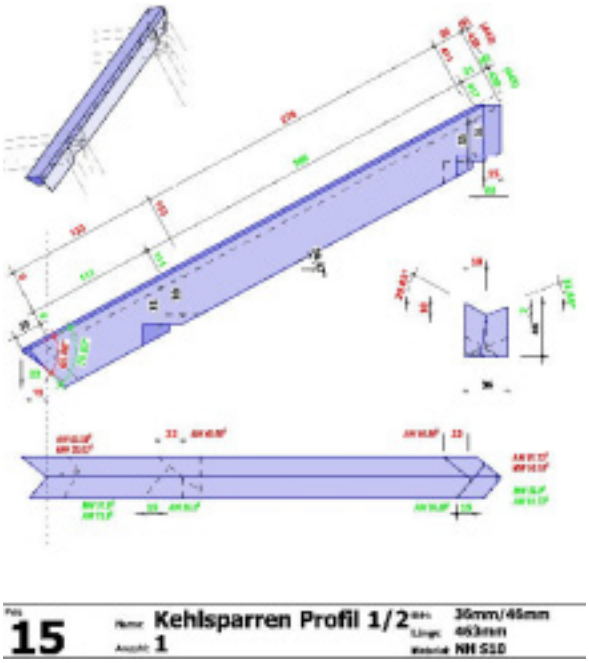

Lists and shop drawings

What would a roof program be without a list of wooden items?
cadwork Roof draws up such lists automatically using 3D construction, with individual drawings of each and every component.

These lists can then be organized according to different sorting criteria (roof surface, subassembly, cross-section, etc.).
Lists can be optimized automatically.

Separate workshop plans can then be produced for each component, along with all details of its dimensions and technical data.

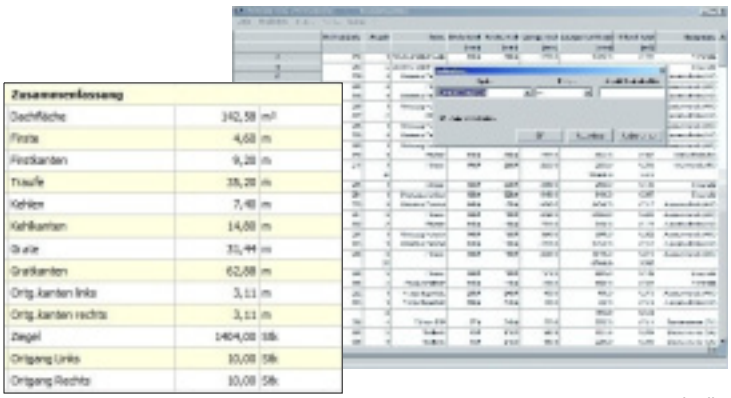

Lists with all relevant information

Lists - Shop drawings

Lists - Optimization

The cadwork list output function differentiates between timber-order, production and assembly lists. The system lists all the relevant data to cost, ordering and production.

This includes wooden elements, along with steel components, solid items and, of course, all joinery methods. Along with the geometric data, the system lists such items as names, subassemblies, materials, EDP codes, weights, number of joints and much more.

These lists can easily be created and formatted. The list data can also be exported into other file formats, such as MS Excel or Databases using the CSV-Format.

The integrated length-optimization feature ensures that material sold by length is ordered to match the final cut dimensions as efficiently as possible. These optimum section-lengths can be entered by type and quantity, or the system can calculate them automatically.

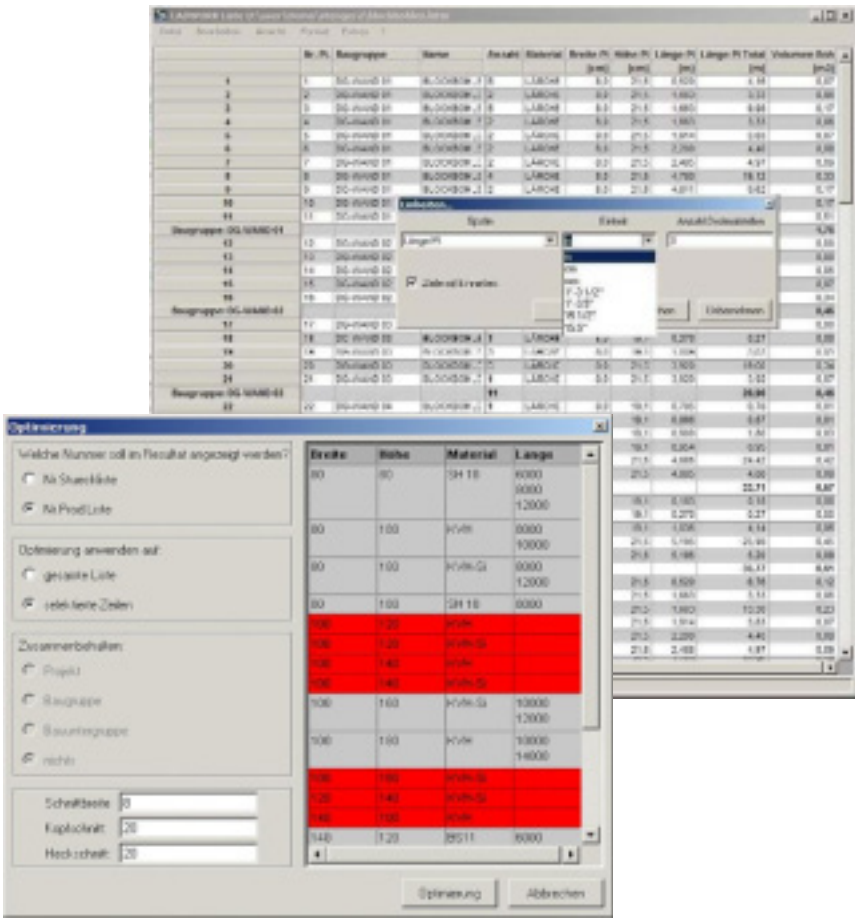

Output of all parts and integreted length optimization

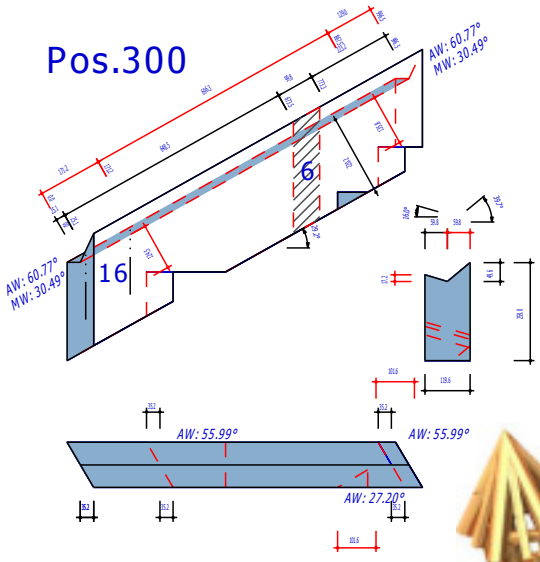

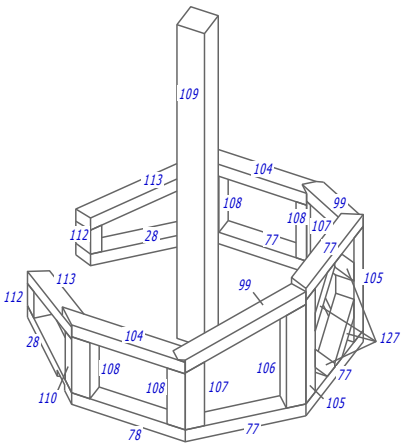

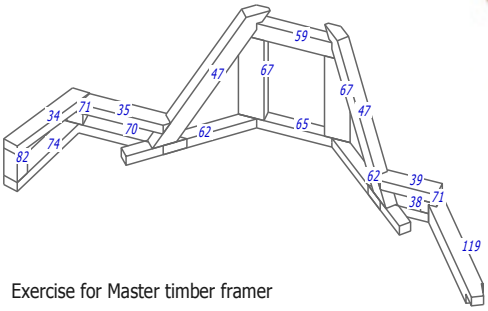

Exercise for Master timber framer

Automatic piece-by-piece shop drawings and details

All components created with cadwork 3D can be displayed automatically as piece-by-piece drawings with dimensions or as wall drawings with dimensions.

Page formats, scaling, title blocks, the number and type of view displays, abbreviated component lists, types of dimensioning, markings, etc. can be individually configured and saved as default settings.

Each drawing can be enhanced with points of detail, exploded views, additional dimensions, text or photos. Different individual component drawings can be combined individually on a single drawing.

Plan layout

The entire content of a plan can be configured as desired to include lines, text, dimensions, textures and so on.

Sophisticated tools - such as move, copy, stretch and modify - allow the elements of the drawing to be positioned and edited as desired.

Photo-quality images, scanned photos, layout plans or lists of wooden items can be integrated directly into the drawing.

Default and editable functions for line-types, fonts, hatching, colors, keyboard layout and other elements are designed to meet virtually any need.

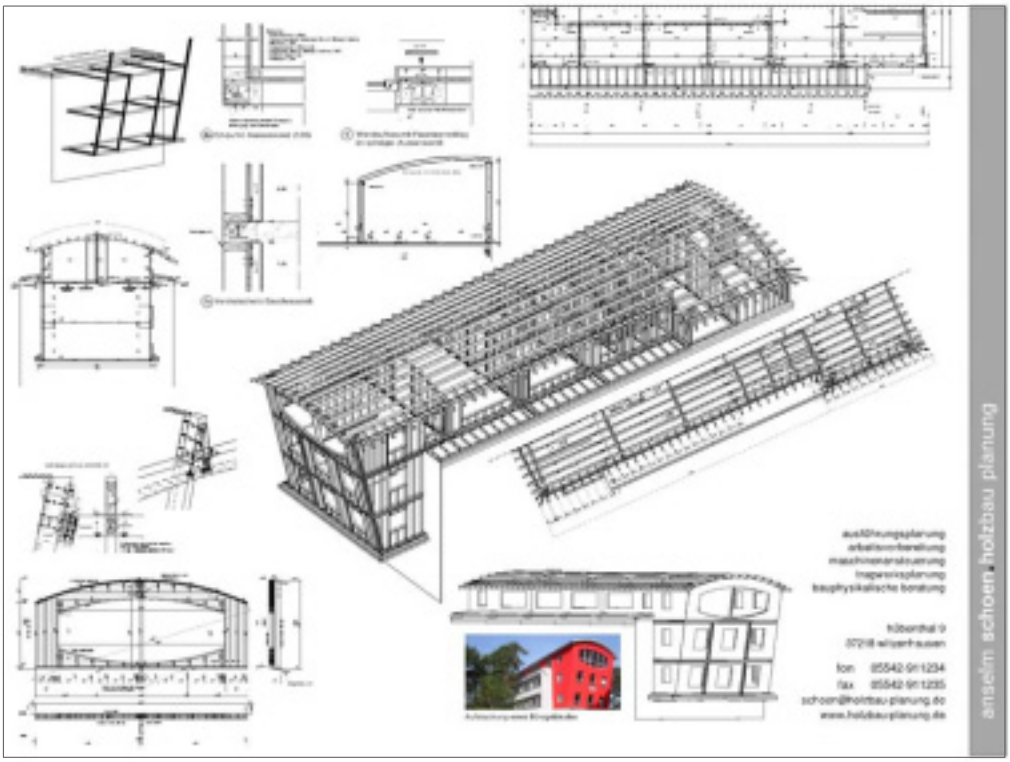

With such a drawing, no questions - The result of precise details and free layout

Any number of plans and scales can be managed within a single file.

You can use cadwork 2D to collate and print out (either on a printer, pdf or plotter) any number of individual drawings of different size and scale. Templates in scale 1:1 provide optimum site-planning support, especially in the area of interior fittings and staircase construction.

From architect's idea to the shop - Only one system involved

Layering feature

Thanks to the layering feature, it is possible to enter the floor plan dimensions at different drawing levels for example.

The level of detail can be defined by the user on one layer and copied to another, adapting them automatically to the scale of the second layer.

The layers can be superimposed in any order.

Machine - cutting systems

With the cadwork Machine module the geometries of components are detected automatically and exported to all current standard cutting systems. This means that your machine's capabilities can be used to 100%.

Experience and close contact with hundreds of users who employ this system of machine actuation represent your guarantee for instant integration of the latest machine technology into the module.

A large advantage of the cadwork machine actuation system is - for example - that designs that were produced in AutoCAD can be stored via interfaces and output to your machines. This way you don't need to do a whole or partial new construction.

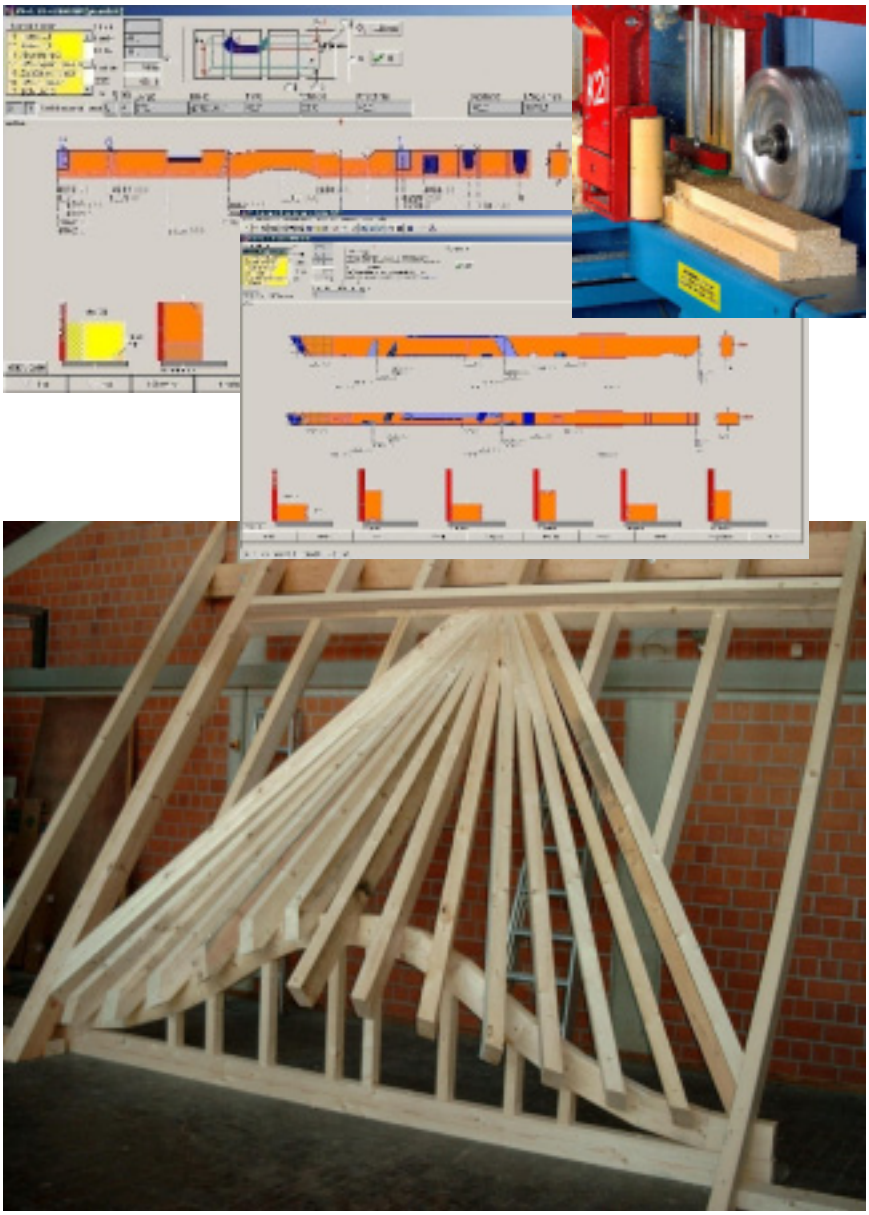

cadwork for the education at the timber framers school *Bundesbildungszentrum des Zimmerer- und Ausbaugewerbes Kassel/Germany*: Dormer, cut on Hundegger K2+

Examples of supported cutting machines and multi-function bridges are:

Hundegger, Weinmann, Krüsi, Schmidler, CMS, Uniteam, Créneau, Depauw, Essetre, Baljer und Zembrod, Burmek, Maka, Makron, Morbidelli, Multiax, Randek, Routech, Stromab, Vega und andere

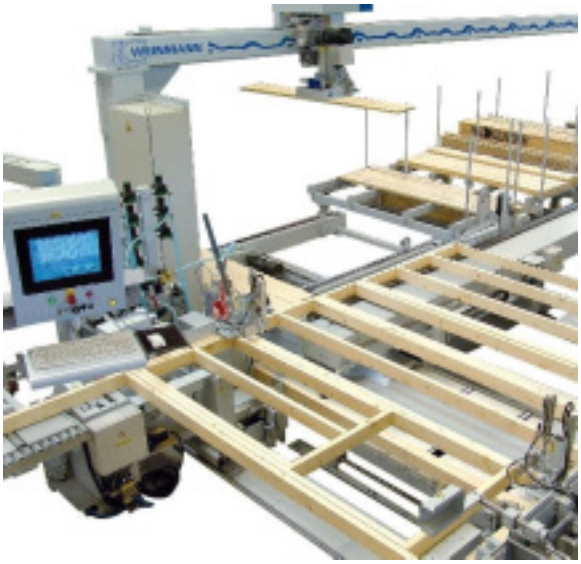

Multi-function bridge, Weinmann

Multi-function bridges machine

In the actuation of multi-function bridges, there is automatic analysis of the geometry of wall, ceiling or roof components. Functions such as loading, saw-cuts, drilling, milling, and nailing are detected according to the type of machine and directly output exported to the machine.

A drawing is produced in which all functions are shown with a good detailed overview and with colour separation. This module also enables the connection of several short walls to produce a multiple wall.

Parametric constructions

cadwork Variant makes it easy for you to produce parametric components or entire building sections. Functionalities for graphics creation of variants correspond to the mode of operation of standard CAD designs. A recorder is simultaneously running that records progress in work and samples the variable names. This reduces the time and effort of practice to a minimum.

In the designing process, not only geometrical and text variables but also mathematical, algebraic and trigonometric computing operations are available.

Building sections generated with the Variant can be read into 2D or directly into 3D at any time.

The entire geometry of the variant design is modified by the entry of the parameters that you have established. All parameters are entered as values or are extracted from the existing design.

Typical fields of application for cadwork Variant are roof, truss, shelf and shed designs, laminated constructions or groups of fasteners.

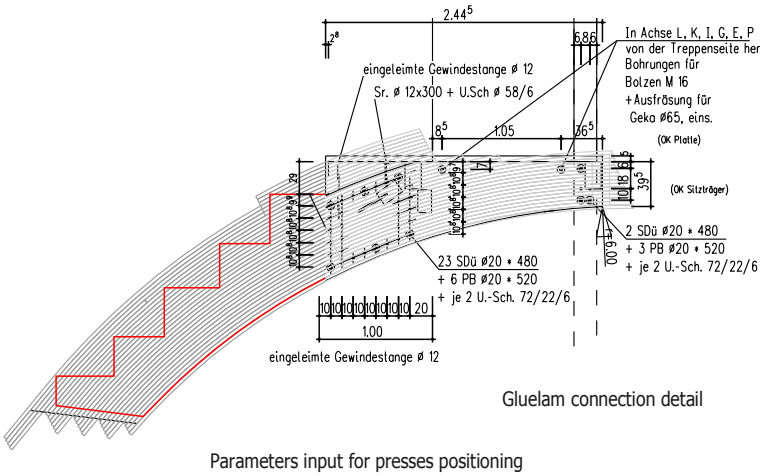

Gluelam connection detail

Parameters input for presses positioning

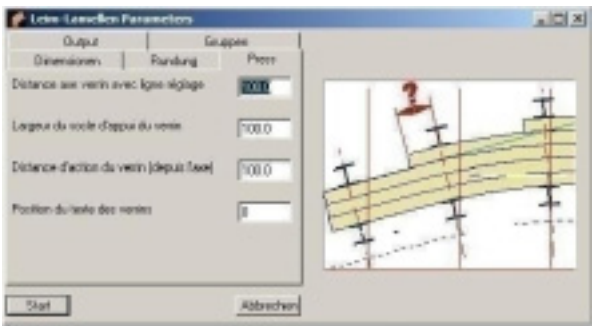

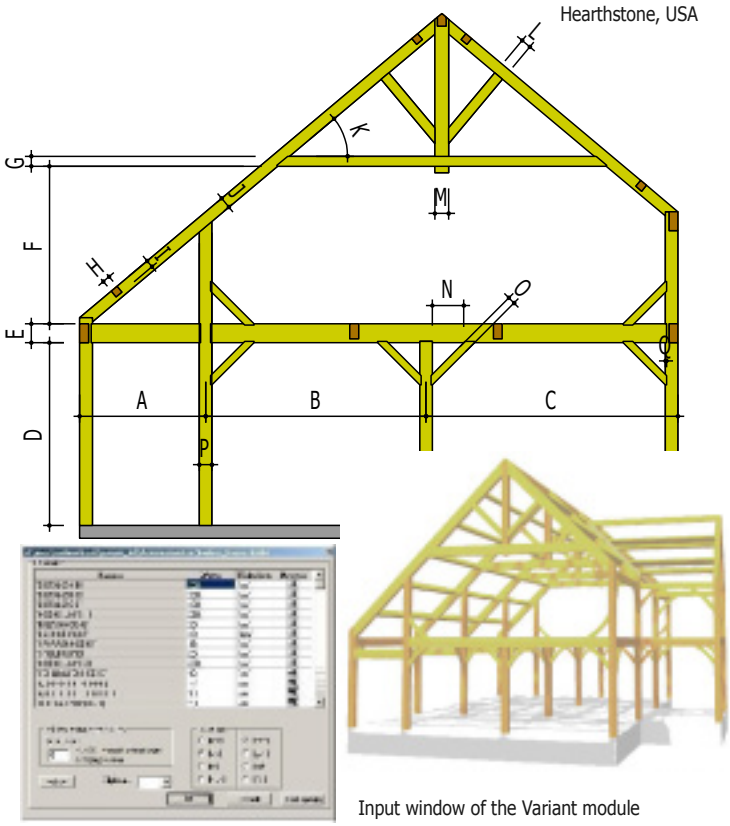

Input window of the Variant module

Glulam manufacturing

The cadwork Lamella module is integrated into cadwork. On the basis of the profile of any desired laminated beam, laminate divisions and laminate lists are automatically computed with the exact rough dimensions of the laminate.

The illustration and measurement of the press bed is also performed automatically.
Each lammella can be extended individually and is dynamically matched to the curved or developed view.

In computing, the widest range of boundary conditions can be taken into account.
The following are some examples:

- Min. lamella length
- Graduation lengths
- Reference joint
- Press bed limit stops
- Lamella sorting categories
- Dry joints
- Mode of gluing
- User-definable output format, e.g. for the rough lamella
- Net dimensions and computing of waste

Staircase - 3D Cabinet

Staircases

The stairs module allows you to generate quickly and in details all types of stairs. The link with the cadwork 3D module also allows an easy integration of a stair in a complete construction as well as further modifications.

Module Features:

- Sketches of free, simple or complex stairs
- Rack stairs and French stairs
- Stairs without stringers
- Free combination of stringer construction
- Free automatic swinging in plan or in the stringers development
- Any changes in plan or stringers are immediately adapted dynamically in other respectives representations
- Automatic generation of stairs, risers, balusters, handrail and posts as well as stringers
- All details can be worked up again freely in cadwork 3D module
- CNC machines interface. Details upon request

Automatic generation of stairs, risers, balusters, handrail and posts as well as stringers

3D Cabinet

cadwork 3D Cabinet is the main tool for free construction that can be used for design, assembly, list ,machine data and all relevant drawings needed for manufacturing.

cadwork 3D Cabinet is a product that covers the whole trade and can be used to speed up the manufacturing process. cadwork 3D Cabinet is user-friendly and user oriented which makes it easy to learn.

Thanks to its versatility and ease of use, it provides advantages in time, flexibility, speed and quality that warrant a successful business.
The list and shop drawing modules automatically create all documents based on the 3D model. Creation of marketing documents, dimensioned shop drawings and bill of material in custom layouts has never been so easy.

cadwork 3D Cabinet can efficiently mass produce kitchen cabinets with the use of 3d libraries as well as complex custom projects.

Exhibition construction

The versatility of cadwork 3D gives you a transparent editing facility for all functions from the fields of exhibition construction or indoor construction.

There are not longer additional costs for special modules, because the cadwork 3D basic module also includes all of the necessary facilities for user-defined design.

It doesn't matter what material you choose. Bars, profiles, panels and fasteners made from steel, aluminum, timber, plastic, glass and other materials can be joined into the overall design of your choice. You can take a virtual walk around your exhibition stand even in the planning phase, when working in conjunction with the integrated cadwork shading (image) module.

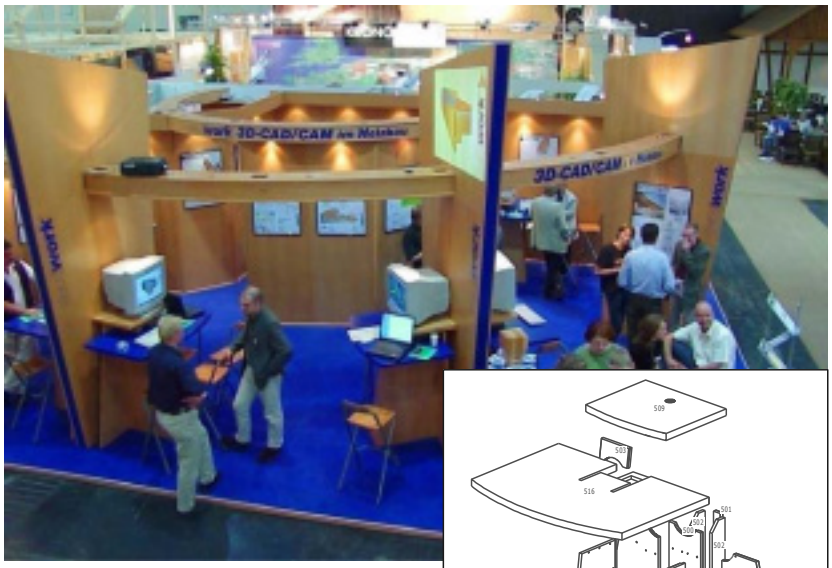

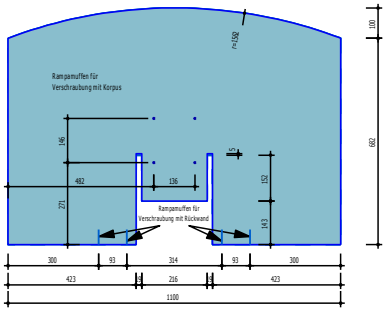

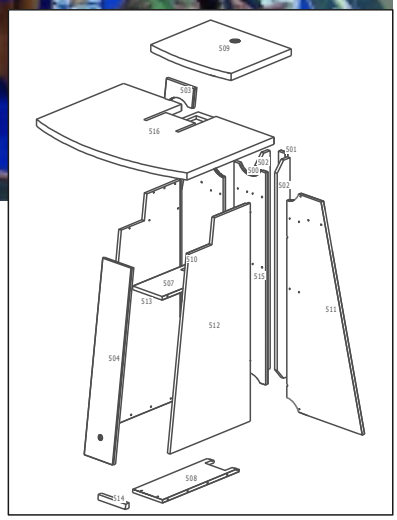

cadwork booth, Salland

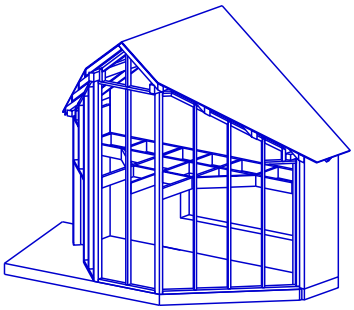

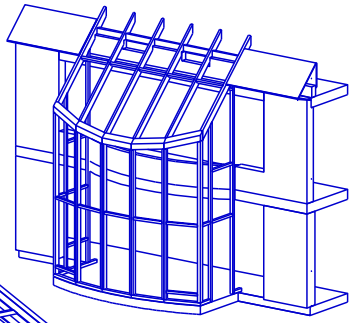

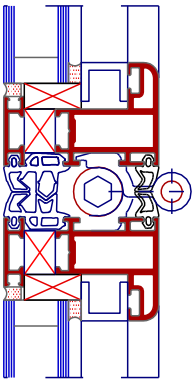

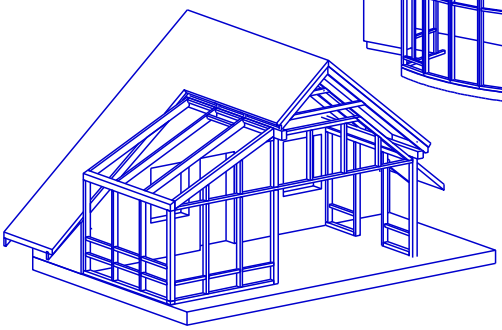

Conservatories

The standard cadwork modules are also on hand to help you in the area of conservatory construction. Paying close attention to detail becomes more important in achieving outstanding results, especially when construction and presentation is essential.

As with both exhibition and indoor construction, there is a free choice of materials, cross-sections, profile-section designs and joinery methods. All structural items are likewise included in lists and automatically displayed as individual component drawings.

A feature of special note in this respect is the precision of the listing and drawing, for ordering purposes, of the individual sections of glass.

Total station realtime connection with cadwork 3D

The advantage of this tool is obvious: What had to be measured earlier by the surveyor can now be done as a whole package by you.

Take a full survey of the lot and existing foundation for example. Then to be able to take your points and shoot them back on site during the construction process to find locations for rebar, sills, or locating important members of the project precisely, and many more. Builders or engineers can now generate this data so the value is added to the entire project; it's an extra service you can offer.
Topographic data implementations, production data (building on a slope), placing hardware on beams, drilling placements/angles and depths, integration Landscape, volume of fill / excavation...

It's not just a survey station! Some of the key functions to this machine is the measure and layout functionalities. Whether it's an interior room, a site survey, or a facade, no matter what you are measuring, everything can be measured together as a whole inside one project.

Full packet:

Software, Total station, cadwork training and support. Free interface for clients purchasing the total station through cadwork .

Renovation - restoration

Using the basic cadwork timber construction modules, as standard, you can also cover the entire field of renovation and restoration.

From precise recording of the construction of old buildings, through damage recording to the 3D re-construction of distorted, missing or damaged components, you can edit them all.

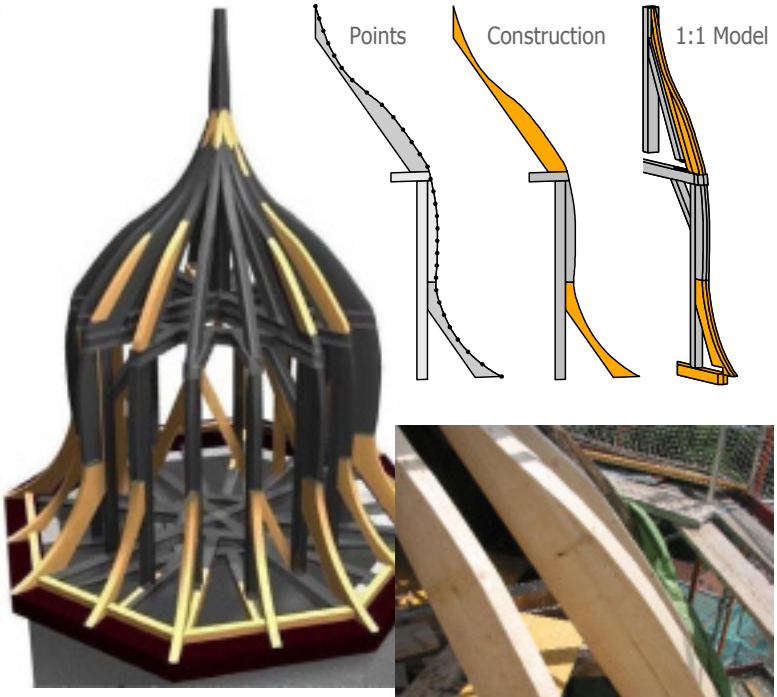

Defects survey

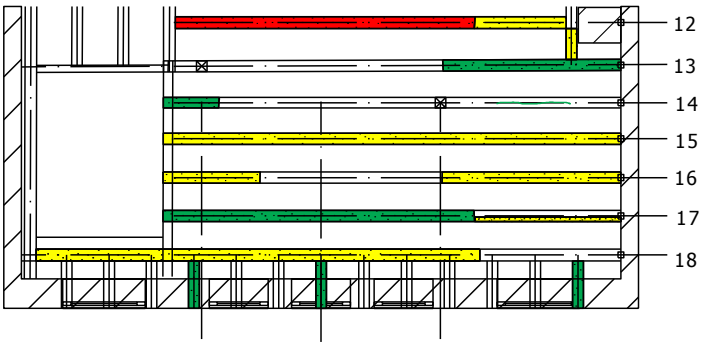

Überwiegend zerstört Reparatur nicht sinnvoll Austausch erforderlich	Teilweise zerstört Reparatur möglich Querschnitt ergänzen	Oberfl. geschädigt Querschnitt voll vorh. Oberfläche überarbeit.	Nicht zugänglich Zustand und Restquers. nicht ermittelbar

Church of Castle Haigerloch,D
Holzbau Ott, D-Gammertingen

Photo-realistic views and photomontages

The cadwork shading module, which is fully integrated, enables you to achieve a quick, professional presentation of your 3D designs.

Surface textures, transparent sections, glass effects and the effect of light & shade produce a decisive effect in sales meetings, quotations and competitive quotes. And you can maintain this effect in your photomontages, slideshows or videos. The automatic alignment of wood textures along beam axes is particularly noteworthy for anyone designing wood constructions.

Using a direct interface, your projects can also be exported to the professional rendering software Artlantis from Abvent.

Interfaces for data exchange

cadwork is a transparent CAD system by means of which you can work from the stage of architectural planning through structural design to production without any interfaces. This is an impressive advantage in relation to multi-track solutions, and makes a tremendous contribution to efficiency and cost saving.

However, you are, of course, also working together with companies that use different CAD systems. In order to make it possible for data to be exchanged with those companies easily, there is a wide range of powerful 2D and 3D interfaces. Please find below a list of the main interface formats that we support.

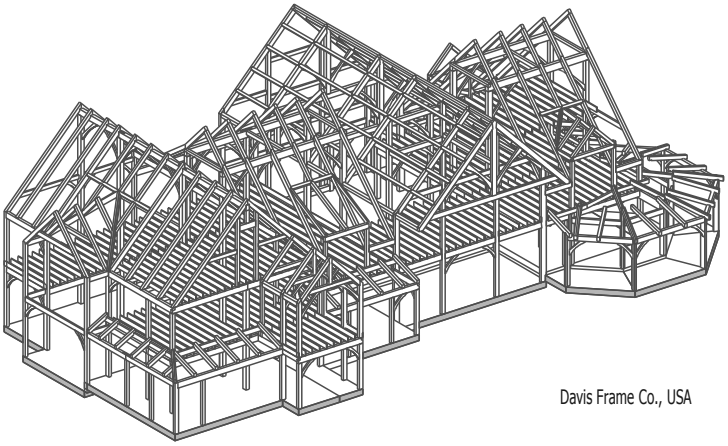

Davis Frame Co., USA

Pacific Timber Frame, Canada

Interfaces:

DXF/DWG (all CAD/AutoCAD)
IFC (ArchiCAD, Nemetschek, Revit, ADT)
ARTLANTIS (Rendering)
ACIS-3D / SAT (AutoCAD ...)
STEP/STP and **DSTV** (RSTAB)
3D-HLI (ArCon, Speedikon or Spirit)
RCE (RoofCon) and **MXF** (MiTek)
VI 2000 and **Bauset** (visual Calculation)
IGES and others

your needs, our solutions ...

cadwork informatik Software GmbH
Lavesstrasse 4
31137 Hildesheim
Germany
Tel. +49 (0) 5121-919990
Fax +49 (0) 5121-919960
info@cadwork.com
www.cadwork.com

Roller coaster "Balder" in Göteborg, Sweden -
Ing.-Holzbau Cordes, D-Rotenburg.
Cut with a K2.

Basel (Switzerland)
cadwork informatik
Aeschenvorstadt 21
CH-4051 Basel
Tel. +41 (0) 61-278 9010
Fax +41 (0) 61-278 9020
info@cadwork.ch

Hildesheim (Germany)
cadwork informatik
Lavesstrasse 4
D-31137 Hildesheim
Tel. +49 (0) 5121-919990
Fax +49 (0) 5121-919960
info@cadwork.com
Also your contact for the
branch in: Stuttgart (Germany) and
Slovakia

Blonay (Switzerland)
cadwork SA
Chemin du Paradis 16
1807 Blonay
Tel. +41 (0) 21-943 0040
Fax +41 (0) 21-943 0050
blonay@cadwork.ch
Also your contact for the
branch in:
Clermont-Ferrand und Paris (F)
Spain, Italy

St. Gallen (Switzerland)
cadwork informatik
St. Jakobstraße 37
9000 St. Gallen
Tel. +41 (0) 71-242 0030
Fax +41 (0) 71-242 0039
sg@cadwork.ch
Also your contact for the
branch in: Rep. Czech

Tirol (Austria)
cadwork informatik GmbH
Neumühle 3
A-6600 Breitenwang
Tel. +43 (0) 5672-72990
Fax +43 (0) 5672-72990-90
info@cadwork.at

Montreal (Canada)
cadwork informatique
5037, rue Chabot
CAN-Montreal, QC H2H 1Y7
Tél. +1 514 542 2442
Fax +1 514 542 2443
montreal@cadwork.ca

... see you soon!